DEUBLIN
HOERBIGER Rotary Solutions

ROTARY UNIONS

water | steam | air | hydraulic | hot oil | vacuum

General Industry Catalog

GI 242 US

www.deublin.com

Selection Chart for Deublin Rotary Unions

Size	Series	Max. Operating Data			Description	Pages
		p bar	T °C	n rpm		
Water & Hot Oil						5 - 23
DN 10 - 50	57	50	121	3,500	General Purpose	5 - 9
DN 15 - 50	57	50	160	3,500	Hot Media	10
DN 15 - 50	57	50	121	3,500	ATEX-Certified	11
DN 40, 50 & 65	657, 755	14	121	1,000	General Purpose	12 - 13
DN 65	755	14	121	750	General Purpose	14
DN 80	857	10	121	500	Water Service	15 - 16
DN 10 - 40	54	120	90	3,500	Stainless Steel	17 - 18
DN 50 - 100	6000	10	121	750	Water Service	19 - 22
DN 125	F	10	121	750	Water Service	23
Air & Hydraulic						24 - 35
DN 6, 8 & 20	1005, 1102, 250-094	70	121	3,500	Standard Applications	24 - 25
DN 10	1115	34	121	3,500	Standard Applications	24 - 25
DN 15	1205	50	121	3,500	Standard Applications	24 - 25
DN 25	355-021	70	121	3,000	Standard Applications	24 - 25
DN 40	452-000	50	121	2,500	Standard Applications	24 - 25
DN 6 & 8	1005, 1102	70	121	3,500	In-the-Shaft Mounted	26
DN 8 & 10	1102, 1116	70	121	3,500	In-the-Shaft Mounted	27
DN 10	1115	34	121	3,500	In-the-Shaft Mounted	27
DN 8 - 15	AP	400	90	1,500	High Pressure High Speed	28
DN 8 - 20	7100	250	70	500	High Pressure Hydraulic	29
DN 8 - 20	1690, 1790, 1890	210	115	250	DEU-PLEX Low Speed	30 - 31
DN 8 & 20	1890	210	115	250	Triple Passage	30 - 31
DN 8 & 15	17, 21, 2117	207	121	250	Single and Tandem Design	32
DN 10 & 15	1379, 1479	250	80	250	Multi Media 4 Pass	33
DN 10	1500	10	121	1,500	DEU-PLEX Air	34
DN 15	1590, 1579	70	121	1,500	DEU-PLEX Air and Hydraulic Oil	35
Hot Media						36 - 43
DN 12 - 80	BC-54000	17.2	232	400	Duoflow, Fixed Siphon	36 - 39
DN 12 - 80	BC-54100	17.2	232	400	Monoflow	40 - 41
DN 20 - 80	BC-54205	15.5	232	400	Duoflow, Rotating Siphon	42 - 43

Attention!
For applications exceeding given limits and/or unlisted rotor connections, contact Deublin for engineering assistance. Please indicate media, size, speed (RPM), pressure, temperature and requested connection. Please note our "Instructions of Hose Installation and Assembly of Deublin Rotary Unions" on page 49. – Dimensions in mm.

Subject to both technical and dimensional changes without prior notice.

DEUBLIN
HOERBIGER Rotary Solutions

Our Vision

We are the provider of choice for rotary solutions in mission critical applications

Our Mission

We listen to our customers and develop innovative solutions which are essential to their success

We foster a culture of curiosity and ownership where our people meet their full potential to exceed our customers' expectations

We strive for continuous improvement through problem solving activities as part of our Deublin Performance System to achieve operational excellence and provide reliable customer solutions

Our Ambition

We strengthen our global leadership in Rotary Unions and are a key player in Slip Rings

We expand our value proposition by integrating new technologies for the benefit of our customers

Wherever water, steam, oil, coolant lubricants or other media have to be conveyed into or through turning machine parts, like rollers, shafts or spindles, Rotary Unions are employed in a wide range of industrial fields.

Developed in 1945, and continually improved as a result of practical requirements, Deublin Rotary Unions are at the cutting edge of technology today.

Deublin Rotary Unions – the industry standard. Our customers can rely on our engineering expertise, R&D capabilities, manufacturing techniques and more than 77 years of knowledge and experience.

Our product range is continuously being developed and refined. Direct contact with customers and a close collaboration with the original equipment manufacturers provide the basis for continuous improvement.

Quality encompasses our entire enterprise.
At Deublin, reliable products at competitive prices and just-in-time deliveries are standards.

This, of course, requires an integrated total quality control system that is practiced in all areas of our organization.

Quality is the result of teamwork!

Deublin has its Corporate Headquarter in Waukegan, Illinois, USA. For over 40 years the facilities in Germany and Italy, followed later by facilities in China and Brazil, have been producing for the Worldwide Market.

Besides sales channel partners in almost every country in Europe, we also have wholly owned subsidiaries in Austria, France, Japan, Poland, Singapore, Spain, South Korea and the United Kingdom.

Our customers can rely on our worldwide manufacturing and sales & service network.

Reliability

Years of experience, continuous dialogues with customers and suppliers have enabled Deublin to offer reliable Rotary Unions at the cutting edge of technology.
The right seal combination compatible with the media guarantees the maximum service life for every application.

A clean and efficient warehousing and handling of the union is just as much a prerequisite for our customers as the adherence to the Deublin specifications.

The market demands more products with a longer service life at more extreme parameters.
Besides new developments and the ongoing modification of existing products, it is above all better wear-resistant seal combinations that accommodate these market demands.

Service

For Deublin customer-orientated service means:
Trendsetting and newly engineered unions for special requirements, an all-encompassing technical consultation by union selection either from the Deublin facility or in the field by one of our representatives, short-term delivery of all selected components and, finally, fast troubleshooting of any and all problems.
Lengthy machine breakdowns are a thing of the past.

A broad assortment of unions is produced for stock and can be procured quickly. An automatic warehousing system enables all required components to be localized fast and effectively.

Lead times for special contractual products are only fractionally longer, for a modern and optimised production and assembly guarantee very short process times.
High-performance CAD systems allow efficient design of custom solutions based on the type of application and market potential.

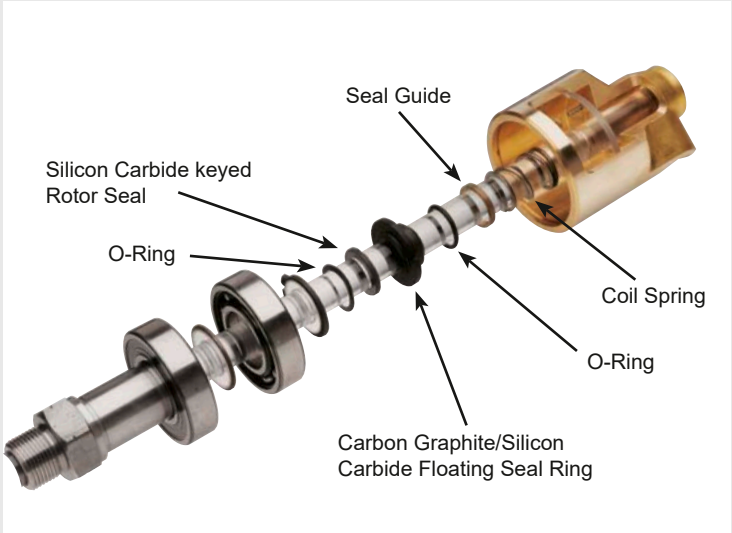

Union Service

The 57 Series is designed for quick, easy replacement of both Floating Seal and the Rotor Seal.

The “57’s” seal is seated in a keyed counter bore at the rotor’s end. The worn seal simply lifts out and the new one drops right in. Since the entire rotor does not need to be replaced or relapped, the repair is fast, easy and on the spot. As you only replace the seals, the repair cost is very economical.

Deublin Performance System (DPS)®

The Deublin Performance System (DPS)® focuses production on customer’s demand.

Through demand-oriented production, balancing of available resources and avoidance of non-value-adding activities the entire production process at Deublin is tailored to the customer’s own requirements.

Today a wide range of models can be dispatched within only a few working days.

DEUBLIN

Rotary Union 57 Series
General Purpose, DN 10 - 50

- Monoflow and duoflow design
- Self-supported Rotary Union
- Radial housing connection
- Balanced mechanical seal
- Keyed rotor seal
- Easy and quick replacement of sealing components (rotor seal, floating seal)
- 3 vent holes
- Forged brass housing
- Stainless steel rotor
- Seal combination – standard: Carbon Graphite/Silicon Carbide
- Lubrication guide page 45

For further information, please contact Deublin or your local representative.

Operating Data

Max. Water Pressure	Model	57-357	750 PSI	50 bar
		527-657	300 PSI	20 bar
Max. Sat. Steam Pressure (interm.)	Model	57-657	15 PSI	1 bar
Max. Hot Oil Pressure	Model	57-657	100 PSI	6.6 bar
Max. Speed, Rotor with Straight Threads:	Model	57-257	3,500 rpm	3,500 min^{-1}
		357	3,000 rpm	3,000 min^{-1}
		527-557	2,500 rpm	2,500 min^{-1}
		657	750 rpm	750 min^{-1}
NPT Threads:	Model	57-557	1,500 rpm	1,500 min^{-1}
		657	750 rpm	750 min^{-1}
Max. Temperature	Model	57-657	250 °F	121 °C

For higher temperature, please consult Deublin.

Torque Ratings 57 Series		
DN	ft.lbs	Nm
10	0.18	0.25
15	0.37	0.50
20	0.74	1.00
25	1.48	2.00
32	1.62	2.20
40	2.14	2.90
50	3.32	4.50

Monoflow unions are used when supply and return lines are connected to opposite sides of the cylinder or roll.

Note: Recessed O-Ring in Rotor End in Place of Copper Gasket (see table on pg. 6 *)

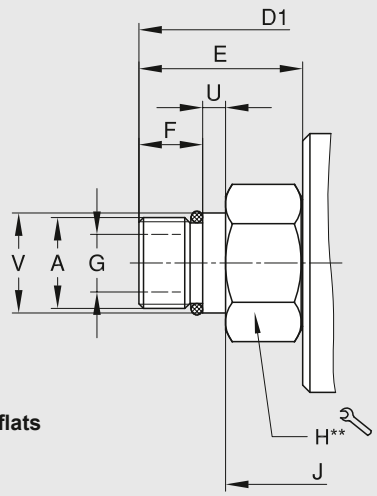

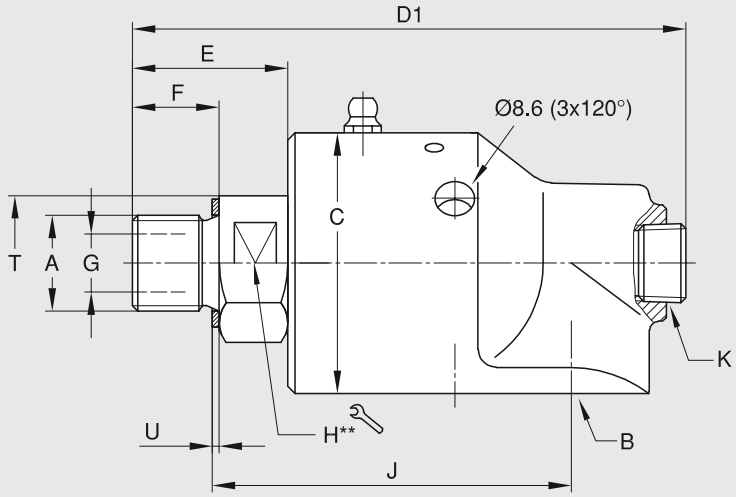

Pilot Type Rotor

**** DN 10 - 20 = hexagon**
DN 25 - 50 = two wrench flats

Illustration shows duoflow with fixed supply pipe. Monoflow units have pipe plugs instead of an elbow.

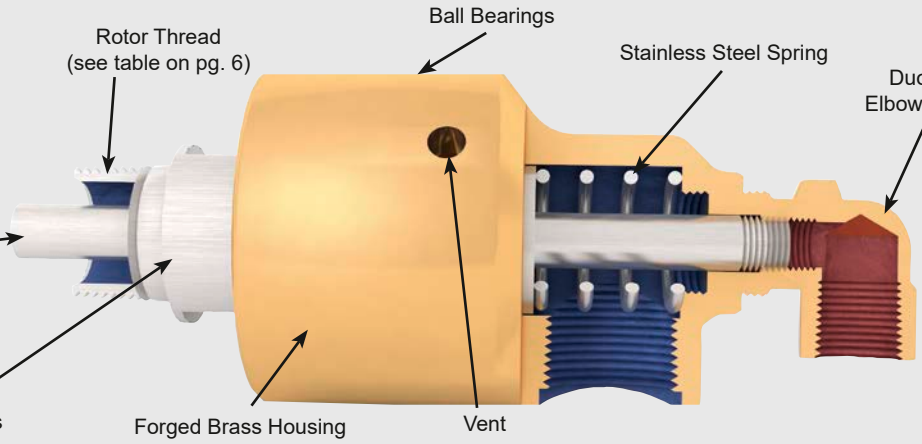

DN	B	Ordering-No STD	A Rotor-Connections		C Ø	D1	E	F	G Ø	H	J	K NPT	T	U	V Ø	kg
10	3/8 NPT	57-000-001	3/8 NPT	RH	45	100	26	16	9.5	22	71	1/4	–	–	–	0.6
	3/8 NPT	57-000-002	3/8 NPT	LH	45	100	26	16	9.5	22	71	1/4	–	–	–	0.6
	3/8 NPT	57-000-003	5/8-18 UNF	RH	45	100	26	16	9.5	22	67	1/4	–	1.6	–	0.6
	3/8 NPT	57-000-004	5/8-18 UNF	LH	45	100	26	16	9.5	22	67	1/4	–	1.6	–	0.6
	3/8 NPT	57-000-094	G 3/8	RH	45	100	26	16	9.5	22	67	1/4	–	1.6	–	0.6
	3/8 NPT	57-000-095	G 3/8	LH	45	100	26	16	9.5	22	67	1/4	–	1.6	–	0.6
	G 3/8	57-130-094	G 3/8	RH	45	100	26	16	9.5	22	67	1/4	–	1.6	–	0.6
	G 3/8	57-130-095	G 3/8	LH	45	100	26	16	9.5	22	67	1/4	–	1.6	–	0.6
15	1/2 NPT	157-000-001	1/2 NPT	RH	57	122	38	22	12.7	30	89.5	3/8	–	–	–	1.2
	1/2 NPT	157-000-002	1/2 NPT	LH	57	122	38	22	12.7	30	89.5	3/8	–	–	–	1.2
	1/2 NPT	157-000-021	3/4-16 UNF	RH	57	119	34	19	12.7	30	79	3/8	–	1.6	–	1.2
	1/2 NPT	157-000-022	3/4-16 UNF	LH	57	119	34	19	12.7	30	79	3/8	–	1.6	–	1.2
	1/2 NPT	157-000-151	G 1/2	RH	57	119	35	19	12.7	30	79	3/8	–	1.6	–	1.2
	1/2 NPT	157-000-152	G 1/2	LH	57	119	35	19	12.7	30	79	3/8	–	1.6	–	1.2
	G 1/2	157-130-151	G 1/2	RH	57	119	35	19	12.7	30	79	3/8	–	1.6	–	1.2
	G 1/2	157-130-152	G 1/2	LH	57	119	35	19	12.7	30	79	3/8	–	1.6	–	1.2
	G 1/2	157-130-738	M 20 x 1.5	RH	57	121	37	14	12.7	30	79	3/8	–	5	22g6	1.2
20	3/4 NPT	257-000-020	3/4 NPT	RH	73	139	37	22	17.5	32	103	1/2	35	–	–	2.1
	3/4 NPT	257-000-021	3/4 NPT	LH	73	139	37	22	17.5	32	103	1/2	35	–	–	2.1
	3/4 NPT	257-000-135*	1-14 UNS	RH	73	139	36	19	17.5	32	94	1/2	35	–	–	2.1
	3/4 NPT	257-000-284	G 3/4	RH	73	136	34	19	17.5	36	95	1/2	–	1.6	–	2.1
	3/4 NPT	257-000-285	G 3/4	LH	73	136	34	19	17.5	36	95	1/2	–	1.6	–	2.1
	G 3/4	257-130-014	M 35 x 1.5	RH	73	140	38	15	17.5	41	102	1/2	–	1.6	–	2.2
	G 3/4	257-130-048	M 27 x 1.5	RH	73	137	35	15	17.5	36	92	1/2	–	6	28g6	2.1
	G 3/4	257-130-284	G 3/4	RH	73	136	34	19	17.5	36	95	1/2	–	1.6	–	2.1
	G 3/4	257-130-285	G 3/4	LH	73	136	34	19	17.5	36	95	1/2	–	1.6	–	2.1
25	1 NPT	357-000-002	1 NPT	RH	83	173	49	29	25	36	117	3/4	45	–	–	3.1
	1 NPT	357-000-003	1 NPT	LH	83	173	49	29	25	36	117	3/4	45	–	–	3.1
	1 NPT	357-000-019	1 1/2-12 UNF	RH	83	173	49	29	25	36	108	3/4	45	1.6	–	3.1
	1 NPT	357-000-074	1 1/2-12 UNF	LH	83	173	46	29	25	36	108	3/4	45	1.6	–	3.1
	1 NPT	357-000-222	G 1	RH	83	163	42	22	25	36	108	3/4	45	1.6	–	3.1
	1 NPT	357-000-223	G 1	LH	83	163	42	22	25	36	108	3/4	45	1.6	–	3.1
	1 NPT	357-000-235	M 35 x 1.5	RH	83	157	36	15	25	36	108	3/4	45	1.6	–	3.1
	1 NPT	357-000-236	M 35 x 1.5	LH	83	157	36	15	25	36	108	3/4	45	1.6	–	3.1
	G 1	357-130-222	G 1	RH	83	163	42	22	25	36	108	3/4	45	1.6	–	3.1
	G 1	357-130-223	G 1	LH	83	163	42	22	25	36	108	3/4	45	1.6	–	3.1
	G 1	357-130-235	M 35 x 1.5	RH	83	157	36	15	25	36	108	3/4	45	1.6	–	3.1
32	1 1/4 NPT	527-000-001	1 1/4 NPT	RH	91	191	57	29	31.8	46	134	1	57	–	–	4.1
	1 1/4 NPT	527-000-002	1 1/4 NPT	LH	91	191	57	29	31.8	46	134	1	57	–	–	4.1
	1 1/4 NPT	527-000-026	1 3/4-12 UN	RH	91	191	57	29	31.8	46	119	1	58	1.6	–	4.1
	1 1/4 NPT	527-000-027	1 3/4-12 UN	LH	91	191	57	29	31.8	46	119	1	58	1.6	–	4.1
	1 1/4 NPT	527-000-054	G 1 1/4	RH	91	189	54	28	31.8	46	119	1	58	1.6	–	4.1
	1 1/4 NPT	527-000-055	G 1 1/4	LH	91	189	54	28	31.8	46	119	1	58	1.6	–	4.1
	G 1 1/4	527-130-054	G 1 1/4	RH	91	189	54	28	31.8	46	119	1	58	1.6	–	4.1
	G 1 1/4	527-130-055	G 1 1/4	LH	91	189	54	28	31.8	46	119	1	58	1.6	–	4.1
40	1 1/2 NPT	557-000-001	1 1/2 NPT	RH	108	218	62	30	38	54	152	1 1/4	63.5	–	–	6.7
	1 1/2 NPT	557-000-002	1 1/2 NPT	LH	108	218	62	30	38	54	152	1 1/4	63.5	–	–	6.7
	1 1/2 NPT	557-000-395	2-12 UN	RH	108	228	72	29	38	54	149	1 1/4	65	1.6	–	6.7
	1 1/2 NPT	557-000-396	2-12 UN	LH	108	228	72	29	38	54	149	1 1/4	65	1.6	–	6.7
	1 1/2 NPT	557-000-198	G 1 1/2	RH	108	228	72	29	38	55	149	1 1/4	65	1.6	–	6.7
	1 1/2 NPT	557-000-199	G 1 1/2	LH	108	228	72	29	38	55	149	1 1/4	65	1.6	–	6.7
	G 1 1/2	557-130-198	G 1 1/2	RH	108	228	72	29	38	55	149	1 1/4	65	1.6	–	6.7
	G 1 1/2	557-130-199	G 1 1/2	LH	108	228	72	29	38	55	149	1 1/4	65	1.6	–	6.7
50	2 NPT	657-000-116	2 NPT	RH	118	257	74	38	47.6	60	185	1 1/4	70	–	–	7.6
	2 NPT	657-000-117	2 NPT	LH	118	257	74	38	47.6	60	185	1 1/4	70	–	–	7.6
	2 NPT	657-000-124	G 2	RH	118	248	65	29	47.6	60	165	1 1/4	70	1.6	–	7.6
	2 NPT	657-000-125	G 2	LH	118	248	65	29	47.6	60	165	1 1/4	70	1.6	–	7.6
	G 2	657-130-124	G 2	RH	118	248	65	29	47.6	60	165	1 1/4	70	1.6	–	7.6
	G 2	657-130-125	G 2	LH	118	248	65	29	47.6	60	165	1 1/4	70	1.6	–	7.6

57 Series – Elbows DN 10 - 50 for Fixed, Threaded Supply Pipe

Duoflow unions are used when supply and return lines are connected to one side of the cylinder or roll; non-supported pipe lengths no longer than 4 x D1 (see page 5 and 6);
max. speed 1,000 RPM; for higher speeds divided supply pipes must be used.

For Rotary Unions with pilot rotor, additional basic models and weight refer to page 6.

* Values are based on the NPT RH models. Refer to difference in E values on page 6 for length on other models or IC drawings on Deublin's website.

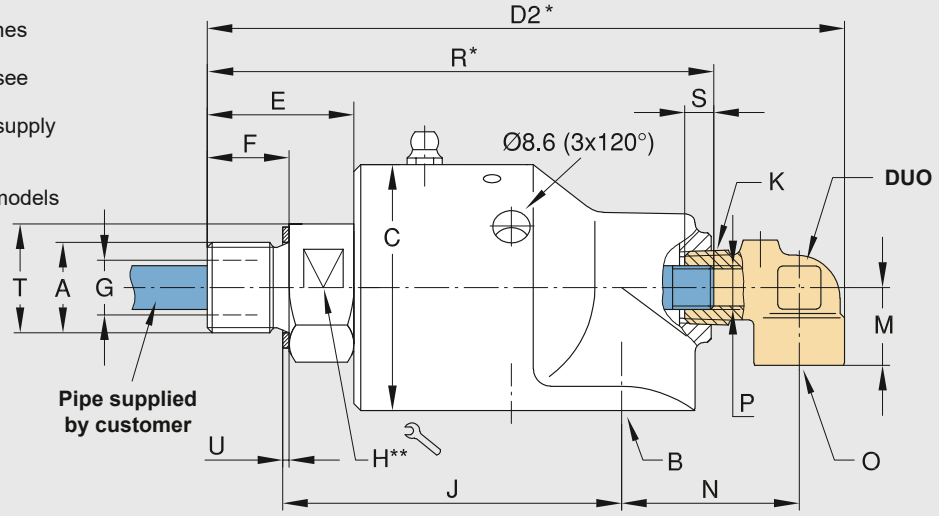

**** DN 10 - 20 = hexagon**
DN 25 - 50 = two wrench flats

Elbows 57 Series

DN	O	fixed, threaded				rotating				divided	+ self-centering							
		Ordering No. DUO	P Pipe	R	S	Ordering No. DUO	P Ød11	R	S	Ordering No. DUO	Ordering No. DUO	L	P1 Ø H9	Q	S	D_2	M	N
10	G ¼	55-121	M 6	98	8	55-807	5.8	98	20	55-843	–	171	6	5	60	124	18	33
	¼ NPT	55-120	M 6	98	8	55-446	5.8	98	20	55-030	–	171	6	5	55	124	18	33
	¼ NPT	–	–	–	–	–	–	–	–	55-445	–	171	6	5	60	124	18	33
15	G ⅜	155-581	G ⅛	118	8	155-709	9.8	116	30	150-232	155-981	201	10	8	60	147	18	40
	⅜ NPT	155-012	⅛ NPT	120	5.5	155-061	9.8	120	30	–	–	–	–	–	–	147	18	40
	⅜ NPT	155-199	G ⅛	117	8	155-471	9.8	117	30	155-470	155-797	201	10	8	60	147	18	40
20	G ½	251-351	G ¼	134	12	251-352	12.8	112	32	251-551	251-371	208	13	11	60	170	26	46
	½ NPT	250-043	¼ NPT	134	7.9	250-075	12.8	138	32	–	–	–	–	–	–	170	26	46
	½ NPT	250-044	⅛ NPT	134	5.5	250-681	12.8	135	32	250-026	–	208	12.5	11	60	170	26	46
	½ NPT	250-367	G ⅛	134	5.5	–	–	–	–	250-680	250-994	208	13	11	60	170	26	46
	½ NPT	250-368	G ¼	135	12	–	–	–	–	–	–	–	–	–	–	170	26	46
25	G ½	350-912	G ⅜	160	12	350-772	15.8	153	35	350-990	351-173	272	16	14	60	204	28	59
	½ NPT	350-083	⅜ NPT	166	20.9	350-163	15.8	166	32	350-366	350-974	272	16	14	60	204	28	59
	½ NPT	350-084	¼ NPT	169	20.6	350-347	15.8	160	35	–	–	–	–	–	–	204	28	59
	½ NPT	350-255	G ⅜	160	12	–	–	–	–	–	–	–	–	–	–	204	28	59
32	G ¾	525-594	G ½	189	14	525-480	21.8	185	40	525-931	525-926	285	22	20	60	237	35	72
	¾ NPT	525-007	½ NPT	189	10.8	525-104	19.02	187	38	525-236	525-592	285	22	20	60	237	35	72
	¾ NPT	525-079	G ½	185	14	525-237	21.8	185	40	–	–	–	–	–	–	237	35	72
40	G ¾	451-171	G ¾	220	16	451-173	25.8	213	44	451-274	451-175	319	26	24	60	262	38	76
	¾ NPT	450-013	¾ NPT	220	11.3	450-144	25.8	220	44	450-263	–	319	26	24	60	262	38	76
	¾ NPT	450-036	½ NPT	230	10.8	450-468	25.8	220	44	450-467	451-162	319	26	24	60	262	38	76
	¾ NPT	450-221	G ¾	220	16	–	–	–	–	–	–	–	–	–	–	262	38	76
50	¾ NPT	450-013	¾ NPT	260	11.3	–	–	–	–	–	–	–	–	–	–	298	38	78
	G 1 ¼	450-534	G 1	261	26	450-612	32.1	240	52	655-174	655-707	382	34	31	60	316	45	96
	1 NPT	450-183	1 NPT	265	34.2	–	–	–	–	–	–	–	–	–	–	316	45	96
	1 ¼ NPT	451-242	G 1	255	19.5	450-625	31.8	240	52	655-966	655-968	382	34	31	60	316	45	96

57 Series – Elbows DN 10 - 50 for Rotating Supply Pipe

Duoflow unions are used when supply and return lines are connected to one side of the cylinder or roll;
max. speed 1,000 RPM; for higher speeds divided supply pipes must be used.

For Rotary Unions with pilot rotor, additional basic models and weight refer to page 6.

* Values are based on the NPT RH models. Refer to difference in E values on page 6 for length on other models or IC drawings on Deublin's website.

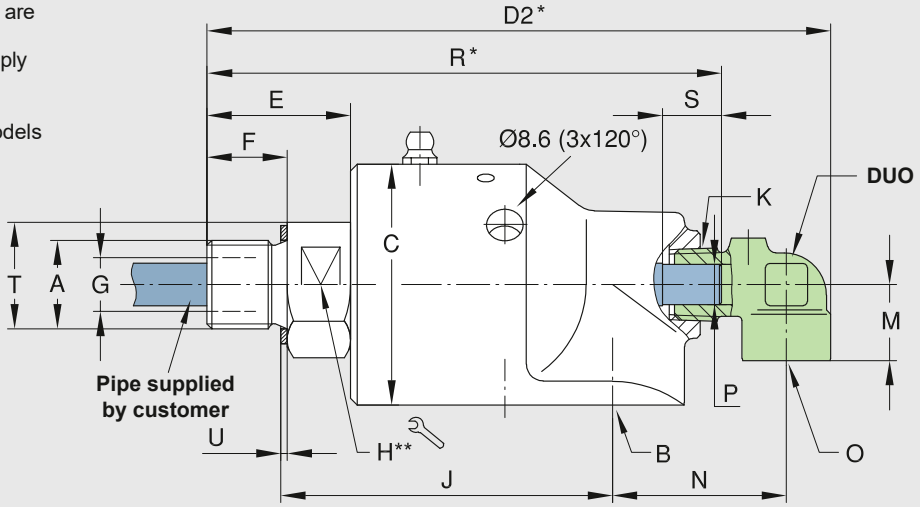

**** DN 10 - 20 = hexagon**
DN 25 - 50 = two wrench flats

57 Series – Elbows DN 10 - 50 with Divided Siphon Pipe (soldered)

Duoflow unions are used when supply and return lines are connected to one side of the cylinder or roll;
soldered supply pipe; non-supported pipe lengths no longer than 4 x D1 (see page 5 and 6);
max. speed 3,500 RPM;

For Rotary Unions with pilot rotor, additional basic models and weight refer to page 6.

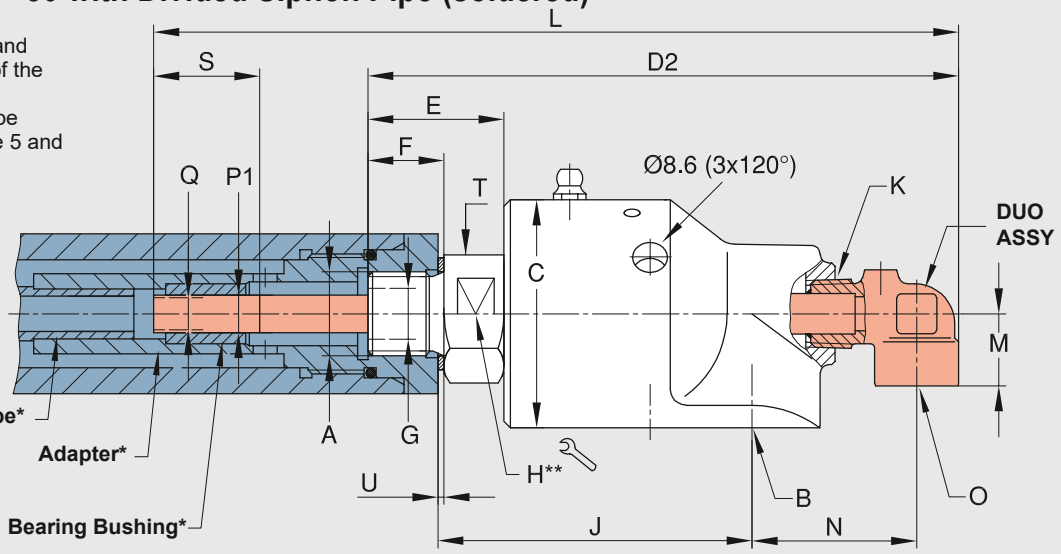

*** supplied by customer**
**** DN 10 - 20 = hexagon**
DN 25 - 50 = two wrench flats

57 Series – Elbows DN 10 - 50 with Flexible, Self-Centering Supply Pipe

Duoflow unions are used when supply and return lines are connected to one side of the cylinder or roll; fixed self-centering supply pipe;
max. speed 3,500 RPM;

For Rotary Unions with pilot rotor, additional basic models and weight refer to page 6.

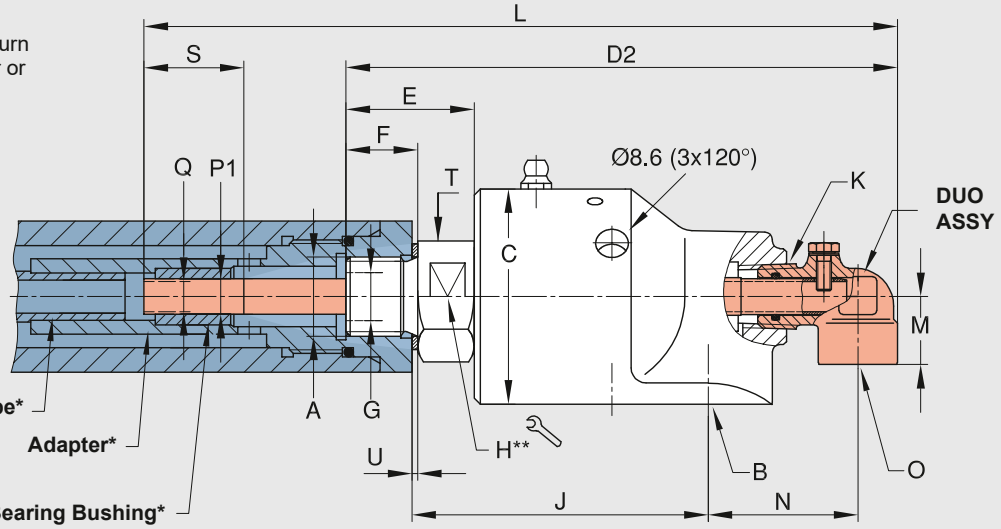

*** supplied by customer**
**** DN 10 - 20 = hexagon**
DN 25 - 50 = two wrench flats

Duoflow Supply Pipe Installations

Deublin water service unions can be adapted for Duoflow applications where a single media is circulated through and around the supply pipe. Duoflow elbows are available in 3 styles to accept a variety of different supply systems. The guidelines shown below should be carefully considered. A poorly designed supply system can contribute to premature union failure.

Where long pipes or high speeds are required, an adapter should be used to avoid transmitting stresses from heavy pipes, cascading water or vibrations to the union. A typical adapter is illustrated.

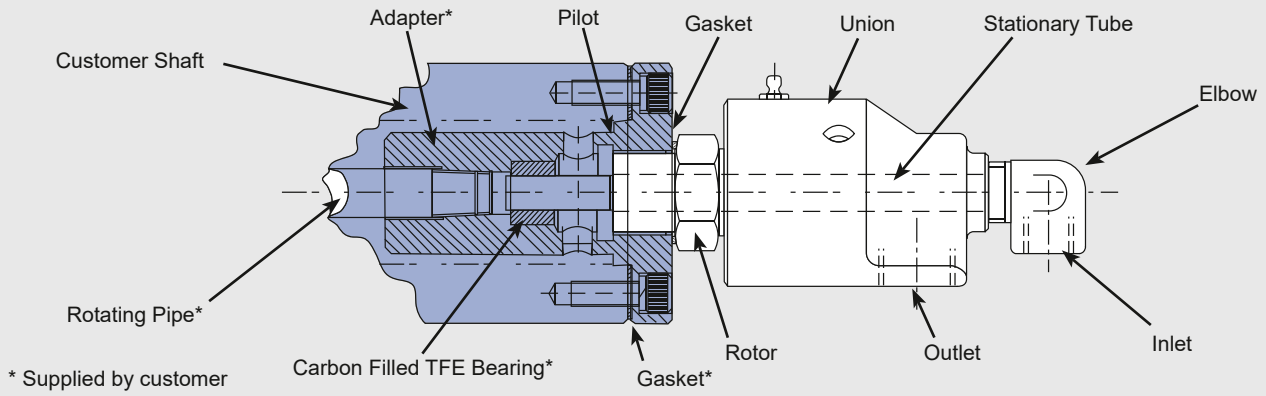

Threaded Pipe

The largest threaded supply pipe achieves the maximum flow rates available for a particular size union. Stresses at the pipe thread can cause breakage allowing the pipe to fall into the roll. For this reason pipe lengths longer than 4 union lengths (4 x D1) and rotational speeds above 1,000 RPM should be avoided.

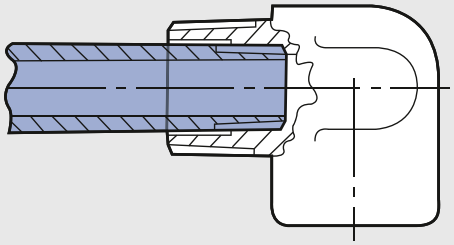

Fixed Tube

Thin wall stainless steel tube silver soldered into the Duoflow elbow produces the strongest, lightest weight assembly. The thinner wall sections allow greater flow rates than the threaded pipe. Maximum flow rates are obtained with the largest tube available for a given size union. Tube lengths is usually limited to 6 union lengths (6 x D1). Speeds to 3,500 RPM are possible.

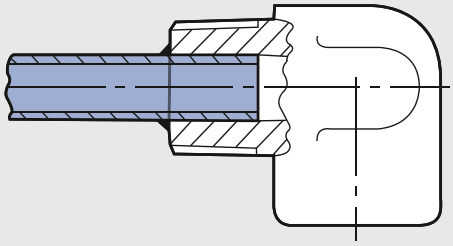

Rotating Pipe

Rotating pipes are fastened internally to rotate with the roll. The Duoflow elbow helps to support the pipe and restrict crosstalk between passages. The pipe must be straight and concentric to the center line to avoid excessive loading of the union. The union must also have a rotor with a straight thread (Example 1" - 14 UNS) rather than a tapered pipe thread to assure concentricity. Rotational speeds above 1,000 RPM should be avoided.

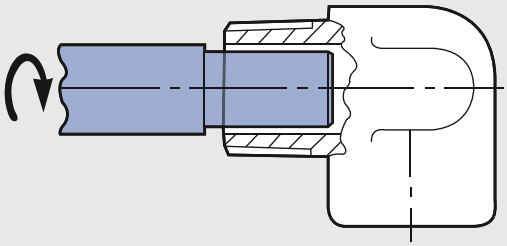

DEUBLIN

Monoflow Rotary Unions 57 series "Hot Media" for Hot Water and Hot Oil DN 15 - 50

- Monoflow and duoflow design
- Self-supported Rotary Union
- Radial housing connection
- Balanced mechanical seal
- Keyed rotor seal
- 3 vent holes
- Forged brass housing
- Stainless steel rotor
- Seal combination – standard: Carbon Graphite/Silicon Carbide
- Lubrication guide see Operating Manual 040-550-**2** (available from our website)

For further information, please contact Deublin or your local representative.

Operating Data

Max. Water Pressure	Model	157 – 357	750 PSI	50 bar
		527 – 657	300 PSI	20 bar
Max. Hot Oil Pressure	Model	157 – 657	100 PSI	6.6 bar
Max. Speed, Rotor with Straight Threads:	Model	157 – 257	3,500 rpm	3,500 min^{-1}
		357	3,000 rpm	3,000 min^{-1}
		527 – 557	2,500 rpm	2,500 min^{-1}
		657	750 rpm	750 min^{-1}
Max. Temperature	Model	157 – 657	320°F	160°C

For higher temperature, please consult Deublin.

Monoflow Rotary Union for Hot Water

			Rotor with BSP Threads		Rotor with NPT Threads		
DN	**A Rotor Connections**	**B**	**RH**	**LH**	**RH**	**LH**	**DN**
15	G ½	G ½	157-2013-151	157-2013-152	157-2012-001	157-2012-002	15
20	G ¾	G ¾	257-2695-284	257-2695-285	257-2418-020	257-2418-021	20
25	G 1	G 1	357-2897-222	357-2897-223	357-2517-002	357-2517-003	25
32	G 1¼	G 1¼	527-2673-054	527-2673-055	527-2637-001	527-2637-002	32
40	G 1½	G 1½	557-2544-198	557-2544-199	557-2514-001	557-2514-002	40
50	G 2	G 2	657-2983-124	657-2983-125	657-2827-116	657-2827-117	50
50	Flange	G 2	657-2983-421		657-2827-421		50

Monoflow Rotary Union for Hot Oil

			Rotor with BSP Threads		Rotor with NPT Threads		
DN	**A Rotor Connections**	**B**	**RH**	**LH**	**RH**	**LH**	**DN**
15	G ½	G ½	157-2014-151	157-2014-152	157-2003-001	157-2003-002	15
20	G ¾	G ¾	257-2475-284	257-2475-285	257-2318-020	257-2318-021	20
25	G 1	G 1	357-2556-222	357-2556-223	357-2279-002	357-2279-003	25
32	G 1¼	G 1¼	527-2718-054	527-2718-055	527-2583-001	527-2583-002	32
40	G 1½	G 1½	557-2241-198	557-2241-199	557-2483-001	557-2483-002	40
50	G 2	G 2	657-2823-124	657-2823-125	657-2511-116	657-2511-117	50
50	Flange	G 2	657-2823-421		657-2511-421		50

Information: For dimensions of the Hot Media Rotary Unions, refer to page 5.
For the duoflow design, elbows and siphon pipes are available. Refer to page 7 – 9.

DEUBLIN

Rotary Union 57 Series
ATEX-Certified, DN 15 - 50

- Monoflow and duoflow design
- Self-supported Rotary Union
- Radial housing connection
- Balanced mechanical seal
- Keyed rotor seal
- Easy and quick replacement of sealing components (rotor seal, floating seal)
- 3 vent holes
- Forged brass housing
- Stainless steel rotor
- Seal combination – standard: Carbon Graphite/Silicon Carbide
- Lubrication guide page 45

For further information, please contact Deublin or your local representative.

Operating Data

Max. Water Pressure	Model	157 – 657	150 PSI	10 bar
Max. Speed, Rotor with Straight Threads:	Model	157 – 257	3,500 rpm	3,500 min^{-1}
		357	3,000 rpm	3,000 min^{-1}
		527 – 557	2,500 rpm	2,500 min^{-1}
		657	750 rpm	750 min^{-1}
Max. Temperature	Model	157 – 657	250°F	121°C

For higher temperature, please consult Deublin.

Legend

CE	=	Declaration of conformity
Ex	=	Hazardous area
II	=	Group of devices
-	=	Device does not convey any potentially explosive atmosphere
2 or 3	=	Device category 2 for use in zone 1 and/or zone 21 3 for use in zone 2 and/or zone 22
G	=	Hazardous area due to gases, vapours, mist
D	=	Hazardous area due to dust
c	=	Design safety (protection by safe design)
IIB	=	Explosion group of gases
IIIC	=	Explosion group of dust
T195 °C T383 °F	=	Maximum surface temperature (less 5K for type approval test); Classification of dust
T3	=	Temperature class (classification of gases)

Example of ATEX identification

ATEX-compliant rotary union
with limited operating time.

Max. usage time: 4,000 h.

ATEX Classification:

CE Ex II-/2G Ex h IIB T3 Gb

Ex II-/2D Ex h IIIC T195°C Db

+3°C ≤ Ta ≤ 40°C

Attention

Ex Deublin Rotary Unions for use in zone 1 and/or 21 have to be operated with a differential pressure or flow monitoring system as protective equipment to prevent an excessive temperature rise occurring due to dry operation of the axial face seal.

Monoflow Rotary Union for ATEX

			Rotor with BSP Threads	
DN	**A Rotor Connections**	**B**	**RH**	**LH**
15	G ½	G ½	157X130-151	157X130-152
20	G ¾	G ¾	257X130-284	257X130-285
25	G 1	G 1	357X130-222	357X130-223
32	G 1¼	G 1¼	527X130-054	527X130-055
40	G 1½	G 1½	557X130-198	557X130-199
50	G 2	G 2	657X130-124	657X130-125

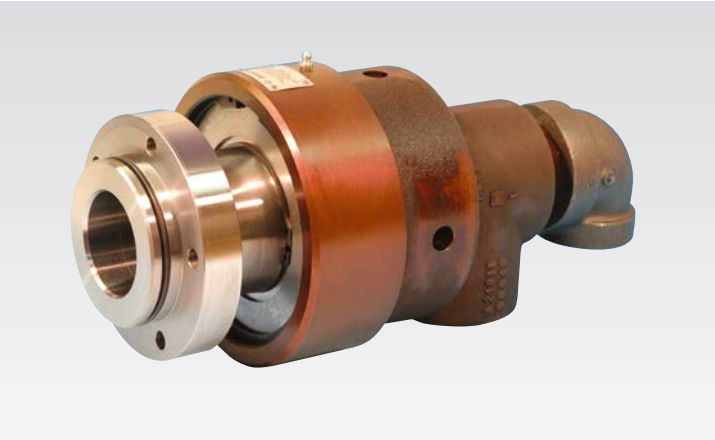

DEUBLIN

Rotary Union
with Flange Rotor, DN 50 and 65

- Monoflow and duoflow design
- Self-supported Rotary Union
- Radial housing connection
- 3 or 6 vent holes
- Forged brass housing (DN 50) and Cast iron housing (DN 65)
- Steel rotor
- Balanced mechanical seal – standard: Carbon Graphite/Ceramic
- Lubrication guide page 45

For further information, please contact Deublin or your local representative.

Operating Data

Max. Water Pressure	Model	657, 755	200 PSI	14 bar
Max. Sat. Steam Pressure (interm.)			15 PSI	1 bar
Max. Speed	Model	657, 755	1,000 rpm	1,000 min^{-1}
Max. Temperature			250 °F	121 °C

For higher temperature, please consult Deublin.

Monoflow Rotary Union

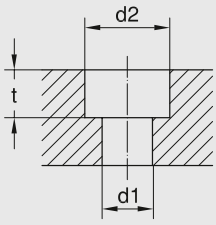

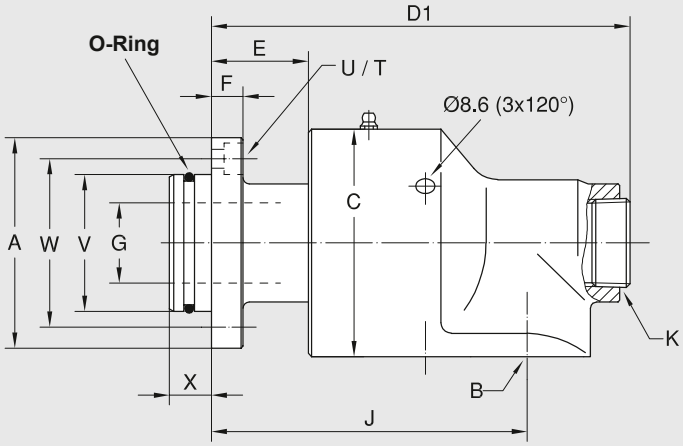

Flange O-Ring
(supplied by Deublin) for:

Model	O-Ring Size
657	73 x 4 Viton

DIN 74:

U	Ø d_1	Ø d_2	t
Km 10	11	18	9.5

Monoflow Rotary Union

DN	B NPT	Ordering-No	A Ø	C Ø	D_1	E	F	G Ø	J	K NPT	T	U	V_{f7} Ø PT	W Ø	X	kg
50	G 2	657-130-421	124	117.5	228	46	16	47.6	172	1 ¼	5 x 72°	Km 10	80	100	20	9

Monoflow Rotary Union

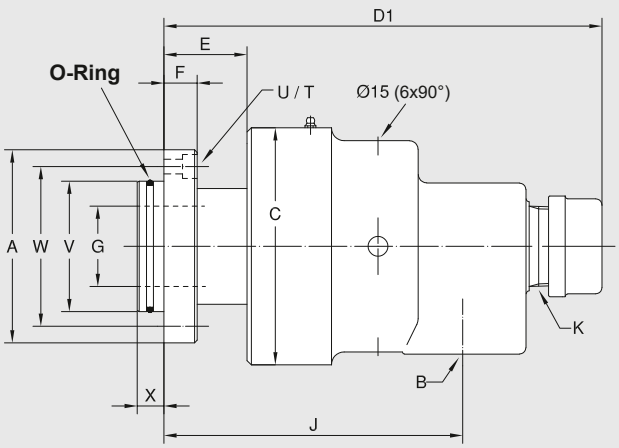

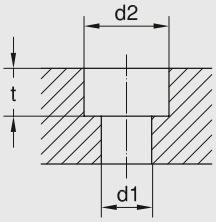

Flange O-Ring
(supplied by Deublin) for:

Model	O-Ring Size
755	90 x 4 Viton

DIN 74:

U	Ø d_1	Ø d_2	t
Km 10	11	18	9.5

Monoflow Rotary Union

DN	B NPT	Ordering-No	A Ø	C Ø	D_1	E	F	G Ø	J	K NPT	T	U	V_{f7} Ø PT	W Ø	X	kg
65	2 ½	755-713-495	145	178	317	63	26	60.3	225	2	5 x 72°	Km 10	98	120	20	22
	2 ½	755-747-495	145	178	323	63	26	60.3	227	2	5 x 72°	Km 10	98	120	20	22

Duoflow Rotary Union for Threaded Supply Pipe

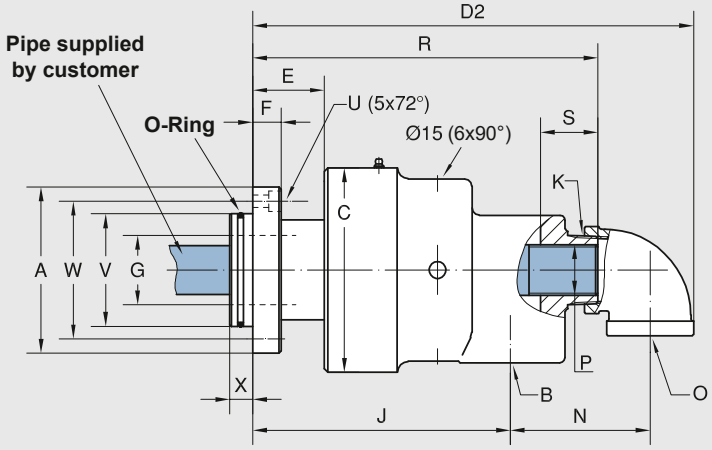

Duoflow Rotary Union for Rotating Supply Pipe

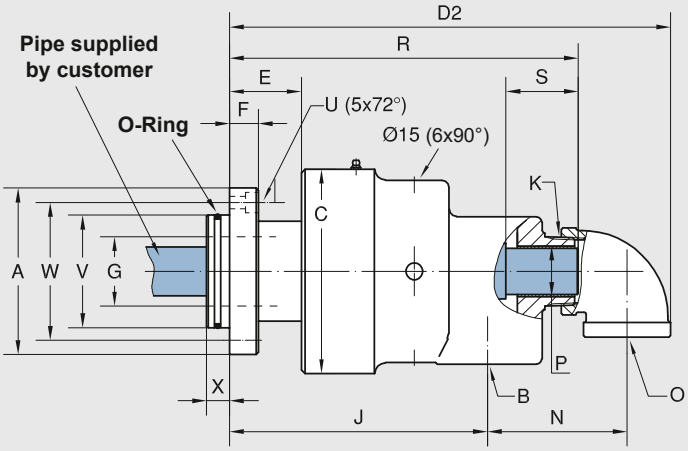

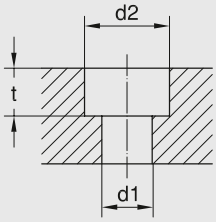

DIN 74:

U	Ø d_1	Ø d_2	t
Km 10	11	18	9.5

Flange O-Ring
(supplied by Deublin) for:

Model	O-Ring Size
755	90 x 4 Viton

Duoflow Rotary Union

DN	B NPT	O NPT	Ordering-No	A Ø	C Ø	D_2	E	F	G Ø	J	K NPT	N	P Pipe	R	S	U DIN 74	V_{f7} Ø PT	W Ø	X	kg
65	2 ½	1 ½	755-713-495139	145	178	372	63	26	60.3	225	2	112	G 1 ½	301	45	Km 10	98	120	20	23
	2 ½	1 ½	755-729-495139	145	178	372	63	26	60.3	225	2	112	Ø39.3 h13	308	70	Km 10	98	120	20	23

DEUBLIN

Rotary Union
General Purpose, DN 65

- Monoflow and duoflow design
- Self-supported Rotary Union
- Radial housing connection
- 6 vent holes
- Cast iron housing
- Steel rotor
- Balanced mechanical seal – standard: Carbon Graphite/Ceramic
- Lubrication guide page 45

For further information, please contact Deublin or your local representative.

Operating Data

Max. Water Pressure	200 PSI	14 bar
Max. Sat. Steam Pressure (interm.)	15 PSI	1 bar
Max. Speed	750 rpm	750 min^{-1}
Torque at 120 PSI / 8 bar	4 FT.LBS	5.4 Nm
Max. Temperature	250 °F	121 °C

For higher temperature, please consult Deublin.

Duoflow Rotary Union for Threaded Supply Pipe

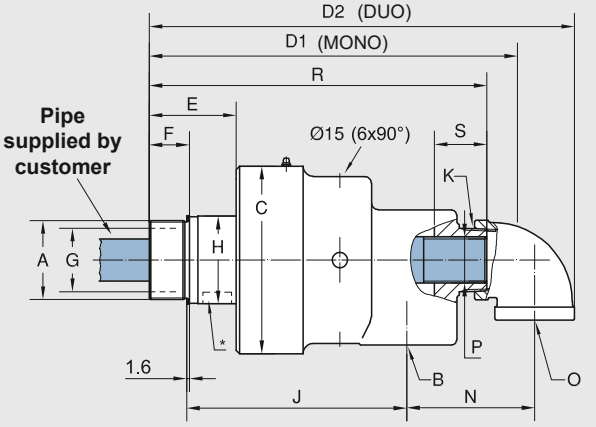

Duoflow Rotary Union for Rotating Supply Pipe

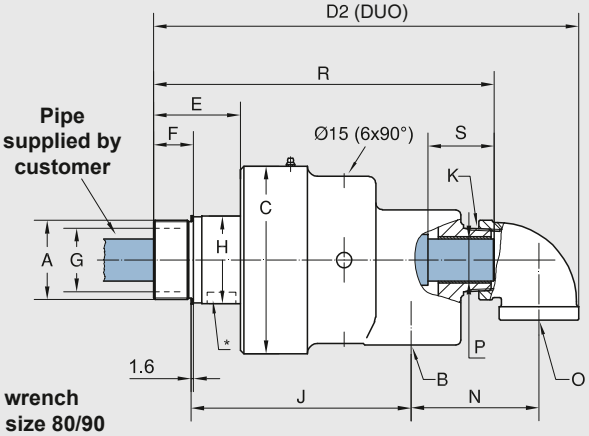

*** Slot for spanner wrench as per DIN 1810, size 80/90**

Monoflow Rotary Union

DN	B NPT	O NPT	Ordering-No	A Rotor Connections		C Ø	D1	E	F	G Ø	H Ø	J	K	P Pipe	R	S	kg
65	2 ½	–	755-700-330	G 2 ½	RH	178	337	83	38	60.3	83	210	2 NPT	–	–	–	20
	2 ½	–	755-700-411	G 2 ½	LH	178	337	83	38	60.3	83	210	2 NPT	–	–	–	20
	2 ½	–	755-700-413	2 ½ NPT	RH	178	336	82	48	60.3	83	219	2 NPT	–	–	–	20
	2 ½	–	755-700-415	2 ½ NPT	LH	178	336	82	48	60.3	83	219	2 NPT	–	–	–	20
	2 ½	–	755-707-330	G 2 ½	RH	178	344	82	38	60.3	83	210	2 NPT	G 1 ½	319	45	20
	2 ½	–	755-707-411	G 2 ½	LH	178	344	82	38	60.3	83	210	2 NPT	G 1 ½	319	45	20

Duoflow Rotary Union

DN	B NPT	O NPT	Ordering-No	A Rotor Connections		C Ø	D2	E	F	G Ø	H Ø	J	K	N	P Pipe	R	S	kg
65	2 ½	1 ¼	755-700-413117	2 ½ NPT	RH	178	393	82	48	60.3	83	219	2 NPT	112	1 NPT	316	–	20
	2 ½	1 ¼	755-700-415117	2 ½ NPT	LH	178	380	81	48	60.3	83	223	2 NPT	112	1 NPT	316	43	20
	2 ½	1 ½	755-702-413139	2 ½ NPT	RH	178	381	82	48	60.3	83	219	2 NPT	112	1 NPT	313	43	20
	2 ½	1 ½	755-707-330139	G 2 ½	RH	178	391	82	38	60.3	83	208	2 NPT	112	G 1 ½	320	45	20
	2 ½	1 ½	755-707-411139	G 2 ½	LH	178	391	82	38	60.3	83	208	2 NPT	112	G 1 ½	320	45	20
	2 ½	1 ½	755-732-330139	G 2 ½	RH	178	391	82	38	60.3	83	208	2 NPT	112	Ø39.9 h13	320	45	20
	2 ½	1 ½	755-732-411139	G 2 ½	LH	178	391	82	38	60.3	83	208	2 NPT	112	Ø39.9 h13	320	45	20
	2 ½	1 ½	755-769-049139	G 2 ½	RH	178	391	81	38	60.3	83	209	2	112	G 1 ½	319	45	23
	2 ½	1 ½	755-901-898139	G 2 ½	LH	178	392	82	53	60.3	83	246	2	112	G 1 ½	320	45	23

DEUBLIN

Rotary Union 857 Series
Water Service, DN 80

- Monoflow and duoflow design
- Self-supported Rotary Union
- Radial housing connection
- Balanced mechanical seal:
  Carbon Graphite/Tungsten Carbide
- Full-media flow
- Easy and quick replacement of sealing components
  (rotor seal, floating seal)
- Vented housing
- Cast iron housing
- Steel rotor
- Lubrication guide page 45

For further information, please contact Deublin or your local representative.

Operating Data

Max. Water Pressure	150 PSI	10 bar
Max. Sat. Steam Pressure (interm.)	15 PSI	1 bar
Max. Speed	500 rpm	500 min^{-1}
Torque at 150 PSI / 10 bar	6 FT.LBS	8.2 Nm
Max. Temperature	250 °F	121 °C

For higher temperature, please consult Deublin.

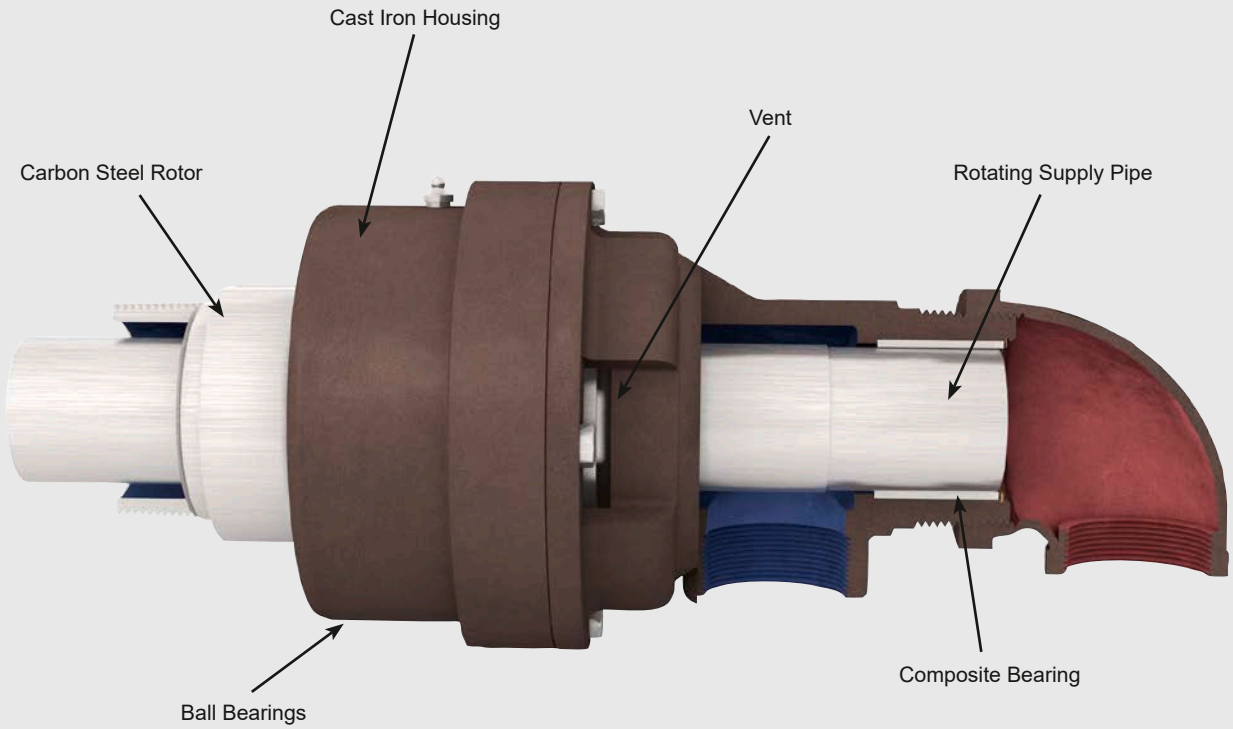

Monoflow Rotary Union

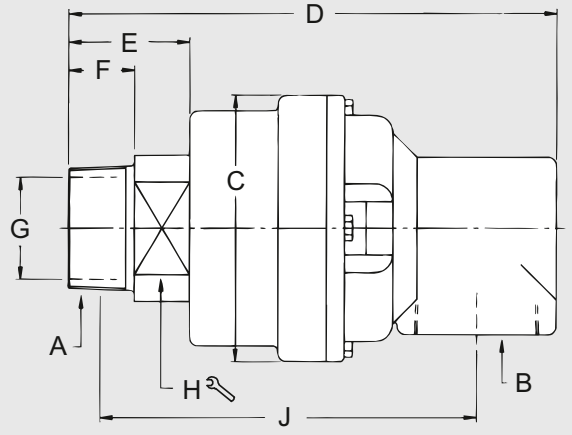

DN	B NPT	Ordering-No	A Rotor Connections	C Ø	D	E	F	G Ø	H	J	kg
80	3	857-000-101	3 NPT RH	190	349	87	48	73	102	267	23
	3	857-000-102	3 NPT LH	190	349	87	48	73	102	267	23
	3	857-000-118	G 3 RH	190	345	84	45	73	102	247	23
	3	857-000-119	G 3 LH	190	345	84	45	73	102	247	23

Duoflow Rotary Union for Threaded Supply Pipe

Rotating Supply Pipe Design

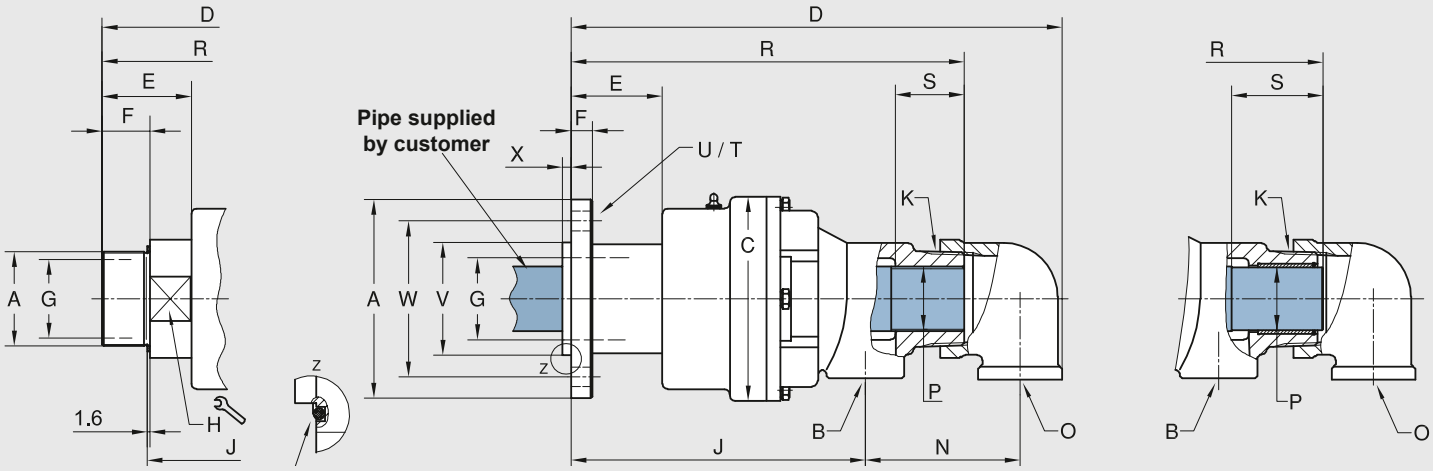

Flange O-Ring
126.37 x 5.33 Viton (857-002-132)
113.89 x 3.53 Viton (857-002-145)
(supplied by Deublin)

DN	B NPT	O NPT	Ordering-No	A Rotor Connections	C Ø	D	E	F	G Ø	H	J	K NPT	N	P	R	S	T	U Ø	V ØPT	W Ø	X	kg
80	2	2	857-001-101	3 NPT RH	190	446	87	48	73	102	246	3	144	2 NPT	351	–	–	–	–	–	–	25
	2	2	857-001-102	3 NPT LH	190	446	87	48	73	102	246	3	144	2 NPT	351	–	–	–	–	–	–	25
	2	2	857-002-118	G 3 RH	190	453	84	45	73	102	228	3	144	58.7 h13	364	85	–	–	–	–	–	29
	2	2	857-002-119	G 3 LH	190	453	84	45	73	102	228	3	144	58.7 h13	364	85	–	–	–	–	–	29
	2	2	857-002-132	Flange Ø229	190	450	91	22	76	–	277	3	144	58.7 h13	366	85	6 x 60°	17	101.68 101.58	192	6.4	30
	2	2	857-002-145	Flange Ø185	190	454	85	20	73	–	271	3	144	58.7 h13	365	85	4 x 90°	18	105.00 104.95	145	8	29

DEUBLIN

Rotary Union 54 Series
Stainless Steel for Water Service, DN 10 - 40

- Monoflow design – for duoflow design refer to page 18
- Self-supported Rotary Union
- Radial and axial housing connection
- Media contacting parts made of stainless steel
- Suitable for the food, chemical & pharmaceutical industries
- Full-media flow
- Seal combination:
  Tungsten Carbide/Ceramic

For further information please contact Deublin or your local representative.

Operating Data

Max. Water Pressure and Max. Speed	see Diagram on page 18	
Max. Speed NPT Threads	1,500 rpm	1,500 min^{-1}
Max. Temperature	160 °F	71 °C

For higher temperature, please consult Deublin.

Temperature > 71 °C / 160 °F – max. 90 °C / 194 °F
only if max. pressure ≤10 bar (150 PSI) and media is liquid (not gaseous).

DO NOT RUN DRY

Monoflow Rotary Union

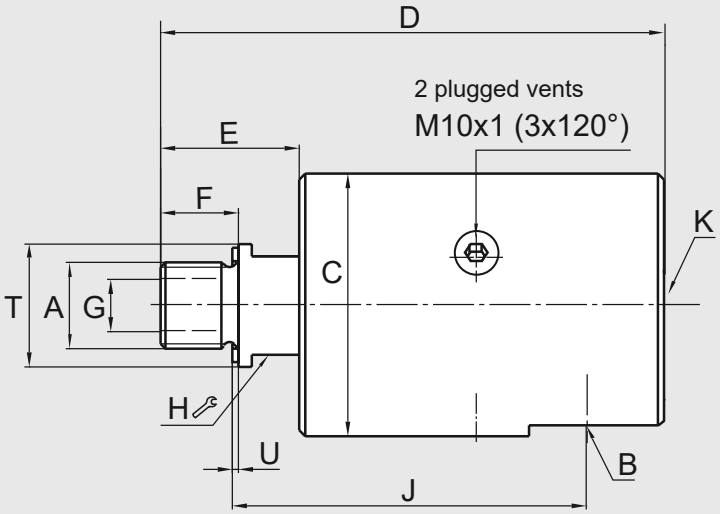

DN	B	Ordering-No	A Rotor Connections		C Ø	D	E	F	G Ø	H	J	K	T Øh11	U	kg
10	G 3/8	54-020-110	G 3/8	RH	49	101	26	16	9.5	19	72	G 3/8	22	1.6	1.1
	G 3/8	54-020-112	3/8 NPT	RH	49	103	28	16	9.5	19	81	G 3/8	22	–	1.1
15	G 1/2	154-020-110	G 1/2	RH	64	123	34	19	12.7	24	89	G 3/8	30	1.6	1.8
	G 1/2	154-020-112	1/2 NPT	RH	64	123	34	19	12.7	24	96	G 3/8	30	–	1.8
20	G 3/4	254-020-110	G 3/4	RH	73	138	36.7	19	17.5	30	97	G 3/4	35	1.6	2.6
	G 3/4	254-020-112	3/4 NPT	RH	73	136	34.6	19	17.5	30	102	G 3/4	35	–	2.6
25	G 1	354-020-110	G 1	RH	94	162	43.5	22	25	36	116	G 3/4	45	1.6	5.1
	G 1	354-020-112	1 NPT	RH	94	162	44	22	25	36	124	G 3/4	45	–	5.1
32	G 1	524-020-110	G 1 1/4	RH	99	182	54.5	27	31.8	41	123	G 1 1/4	50	1.6	6
40	G 1 1/4	554-020-110	G 1 1/2	RH	108	200	58	29	35	50	135	G 1 1/4	60	1.6	8.2
	G 1 1/4	554-020-112	1 1/2 NPT	RH	108	199	57	30	35	50	147	G 1 1/4	60	–	8.2

DEUBLIN

Rotary Union 54 Series
Stainless Steel for Water Service, DN 10 - 40

- Duoflow design – for monoflow design refer to page 17
- Self-supported Rotary Union
- Radial and axial housing connection
- Media contacting parts made of stainless steel
- Suitable for the food, chemical & pharmaceutical industries
- Full-media flow
- Seal combination:
  Tungsten Carbide/Ceramic

For further information please contact Deublin or your local representative.

Monoflow Rotary Union + Elbow = Duoflow Rotary Union

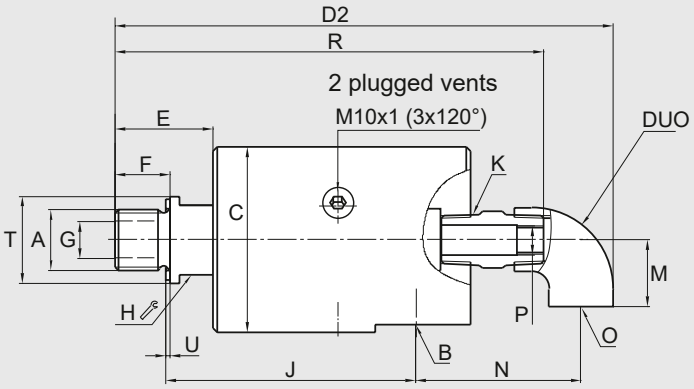

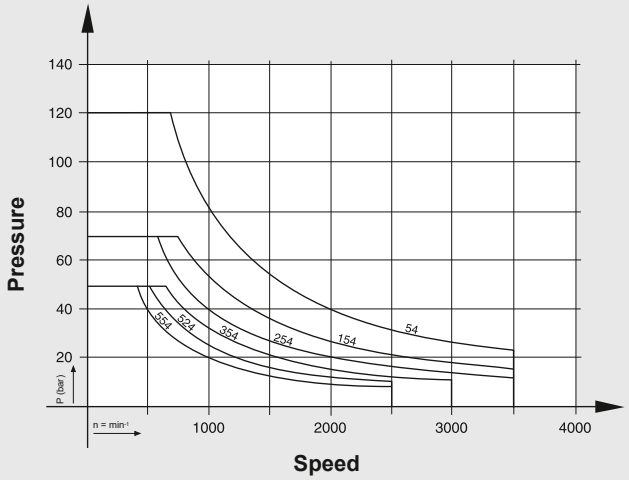

Note: 1,000 RPM max.
for Duoflow

Monoflow Rotary Union + Elbow = Duoflow Rotary Union

DN	Ordering-No Monoflow Union	Ordering-No Elbow	D2	M	N	O	P	R	kg
10	54-020-110	54-150	154	23	57	G 3/8	M6	128	1.3
	54-020-112	54-150	156	23	57	G 3/8	M6	130	1.3
15	154-020-110	154-150	176	23	59	G 3/8	G 1/8	150	2.1
	154-020-112	154-150	176	23	59	G 3/8	G 1/8	150	2.1
20	254-020-110	254-150	216	33	85	G 3/4	G 1/4	176	2.8
	254-020-112	254-150	214	33	85	G 3/4	G 1/4	174	2.8
25	354-020-110	354-150	240	33	87	G 3/4	G 3/8	200	5.3
	354-020-112	354-150	240	33	87	G 3/4	G 3/8	200	5.3
32	524-020-110	524-150	290	45	118	G 1 1/4	G 1/2	234	6.3
40	554-020-110	554-150	308	45	120	G 1 1/4	G 3/4	251	8.6
	554-020-112	554-150	307	45	120	G 1 1/4	G 3/4	250	8.6

DEUBLIN

Rotary Union 6000 Series
Water Service, DN 50 - 100

- Monoflow and duoflow design
- Self-supported Rotary Union
- Radial housing connection
- Steel banded floating seal
- Easy and quick replacement of sealing components (rotor seal, floating seal)
- Full-media flow
- Vent slots
- Cast iron housing
- Steel rotor
- Balanced mechanical seal – standard: Carbon Graphite/Tungsten Carbide
- Lubrication guide page 45

For further information, please contact Deublin or your local representative.

Operating Data

Max. Water Pressure			150 PSI	10 bar
Max. Speed			750 rpm	750 min^{-1}
Torque for	Model	6200	4 FT.LBS	5.4 Nm
		6250	7 FT.LBS	9.5 Nm
		6300	8 FT.LBS	10.9 Nm
		6400	10 FT.LBS	13.6 Nm
Max. Temperature			250 °F	121 °C

For higher temperature, please consult Deublin.

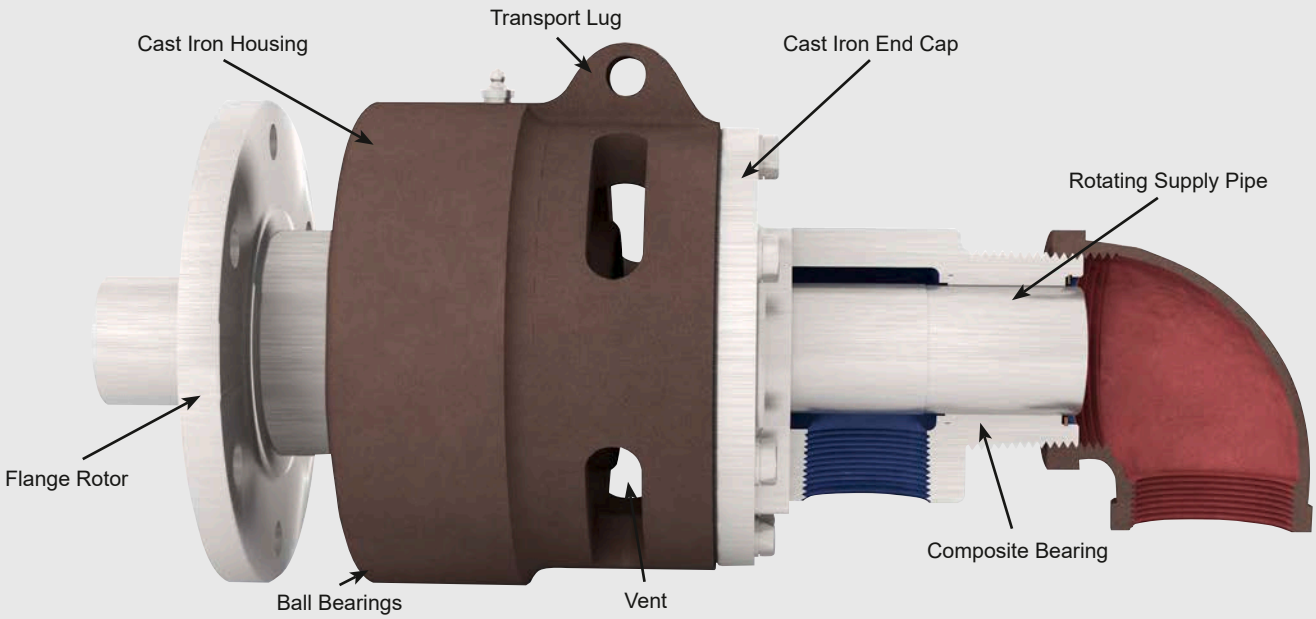

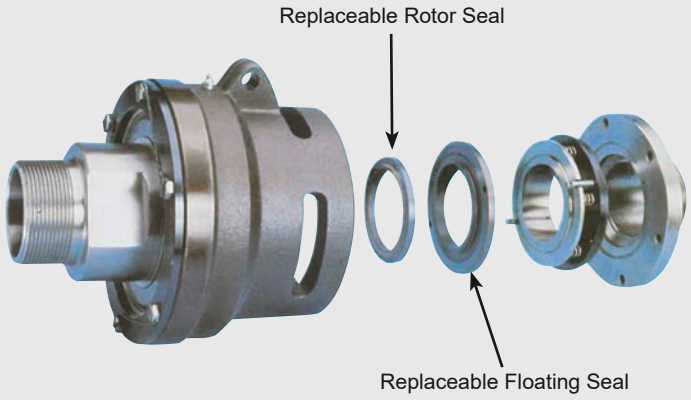

Deublin Exclusive On-The-Machine Repair Cartridge

Seals are replaced quickly and easily. There's no need to remove hose connections or use special tools.
Make sure the system is cold and pressureless!
Simply remove 6 hex bolts and end cap then remove floating seal cartridge and rotor seal face and replace with new seals.
Rotor seal is keyed and sealed to the rotor with a built-in O-Ring.
Replace end cap, hex bolts and locking washers.
Detailed instructions available from Deublin.

Monoflow Rotary Union

Threaded Rotor

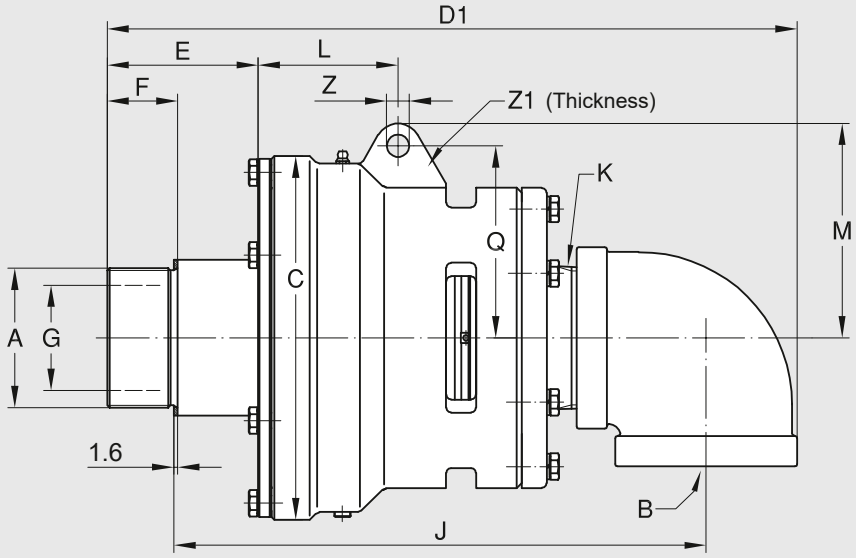

Flanged Rotor

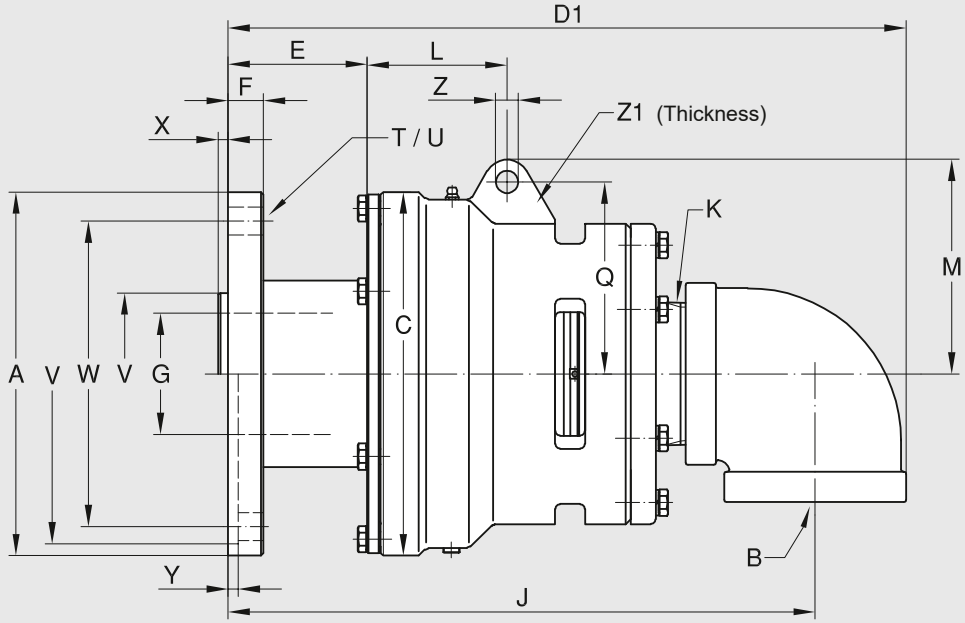

Flange O-Ring
(supplied by Deublin) for:

Model	O-Ring Size
6200	94.6 x 5.33 Viton
6250	94.6 x 5.33 Viton
6300	126.4 x 5.33 Viton
6400	151.8 x 5.33 Viton

DN	B NPT	Ordering-No STD	A Rotor Connections	C Ø	D1	E	F	G Ø	J	K NPT	L	M	Q	T	U Ø	V ØPT	W Ø	X	Y	Z Ø	Z1	kg
50	2	6200-001-123	2 NPT RH	133	298	74	41	47.6	245	2	73	89	78	–	–	–	–	–	–	12.7	25.4	9.5
	2	6200-001-135	2 NPT LH	133	298	74	41	47.6	245	2	73	89	78	–	–	–	–	–	–	12.7	25.4	9.5
	2	6200-001-137	G 2 RH	133	292	66	29	47.6	228	2	73	90	78	–	–	–	–	–	–	12.7	25.4	9.5
	2	6200-001-139	G 2 LH	133	292	66	29	47.6	228	2	73	90	78	–	–	–	–	–	–	12.7	25.4	9.5
	2	6200-001-115	Flange Ø228.6	133	308	82	25.4	47.6	270	2	73	90	78	4 x 90°	17.5	211.25 211.20	162	–	6.4	12.7	25.4	16.5
65	2 ½	6250-001-115	2 ½ NPT RH	178	367	84	48	60.3	296	2 ½	95	113	98	–	–	–	–	–	–	14.3	25.4	23
	2 ½	6250-001-119	2 ½ NPT LH	178	367	84	48	60.3	296	2 ½	95	113	98	–	–	–	–	–	–	14.3	25.4	23
	2 ½	6250-001-121	G 2 ½ RH	178	367	84	38	60.3	283	2 ½	95	113	98	–	–	–	–	–	–	14.3	25.4	23
	2 ½	6250-001-123	G 2 ½ LH	178	367	84	38	60.3	283	2 ½	95	113	98	–	–	–	–	–	–	14.3	25.4	23
	2 ½	6250-001-300	Flange Ø228.6	178	373	90	25.4	60.3	325	2 ½	95	113	98	4 x 90°	17.5	211.25 211.20	162	–	6.4	14.3	25.4	27.7
80	3	6300-001-157	3 NPT RH	229	432	99	48	73	354	3	88	135	121	–	–	–	–	–	–	14.3	25.4	45.5
	3	6300-001-158	3 NPT LH	229	432	99	48	73	354	3	88	135	121	–	–	–	–	–	–	14.3	25.4	45.5
	3	6300-001-103	Flange Ø228.6	229	424	88	22.2	76.2	370	3	88	135	121	6 x 60°	17.5	101.70 101.65	192	6.4	–	14.3	25.4	52
100	4	6400-030-330	Flange Ø276	280	483	78	22.2	101.6	411	4	94	156	133	6 x 60°	20.6	120.62 120.55	228.6	7.5	–	16	32	77

Duoflow Rotary Union for Flanged/Threaded Supply Pipe

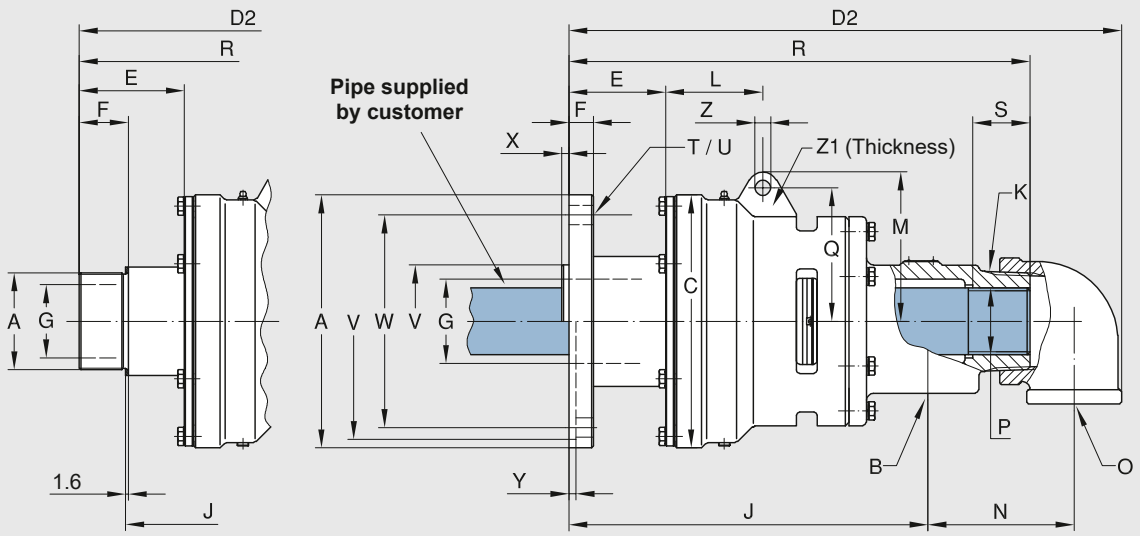

Duoflow Rotary Union

DN	B + O NPT	Ordering-No	A Rotor Connections	C Ø	D2	E	F	G Ø	J	K NPT	L	M	N	P Pipe
50	(2) x 1	6200-011-135	2 NPT LH	133	331	74	38	47.6	216	2	73	90	86	1 NPT
65	(2) x 1 ½	6250-025-121	G 2 ½ RH	178	410	84	38	60.3	234	2 ½	95	111	110	G 1 ½
	(2) x 1 ½	6250-025-123	G 2 ½ LH	178	410	84	38	60.3	234	2 ½	95	111	110	G 1 ½
	(2) x 1 ½	6250-025-300	Flange Ø228.6	178	416	90	25	60.3	275	2 ½	95	111	110	G 1 ½
80	(2) x 2	6300-006-103	Flange Ø228.6	229	499	88	22.2	76	324	3	88	135	132	2 NPT
	(2) x 2	6300-025-103	Flange Ø228.6	229	502	88	22	76	324	3	88	135	132	G 2
100	(2) x 2 ½	6400-024-330	Flange Ø276	280	548	78	22.2	101.6	350	4	95	156	144	2 ½ NPT
	(2) x 2 ½	6400-053-330	Flange Ø276	280	548	78	22.2	101.6	350	4	95	156	144	G 2 ½

DN	B + O NPT	Ordering-No	Q	R	S	T	U Ø	V ØPT	W Ø	X	Y	Z Ø	Z1	kg
50	(2) x 1	6200-011-135	78	276	–	–	–	–	–	–	–	12.7	25.4	13.2
65	(2) x 1 ½	6250-025-121	98	347	25	–	–	–	–	–	–	14.3	25.4	25.2
	(2) x 1 ½	6250-025-123	98	347	25	–	–	–	–	–	–	14.3	25.4	25.2
	(2) x 1 ½	6250-025-300	98	353	25	4 x 90°	17.5	211.25 211.20	162	–	6.4	14.3	25.4	29
80	(2) x 2	6300-006-103	121	416	28	6 x 60°	17.5	101.70 101.65	192	6.4	–	14.3	25.4	55
	(2) x 2	6300-025-103	121	416	28	6 x 60°	17.5	101.70 101.65	192	6.4	–	14.3	25.4	55
100	(2) x 2 ½	6400-024-330	133	445	–	6 x 60°	20.6	120.625 120.600	228.6	7.5	–	16	32	77
	(2) x 2 ½	6400-053-330	133	445	40	6 x 60°	20.6	120.625 120.600	228.6	7.5	–	16	32	77

Duoflow Rotary Union for Rotating Supply Pipe

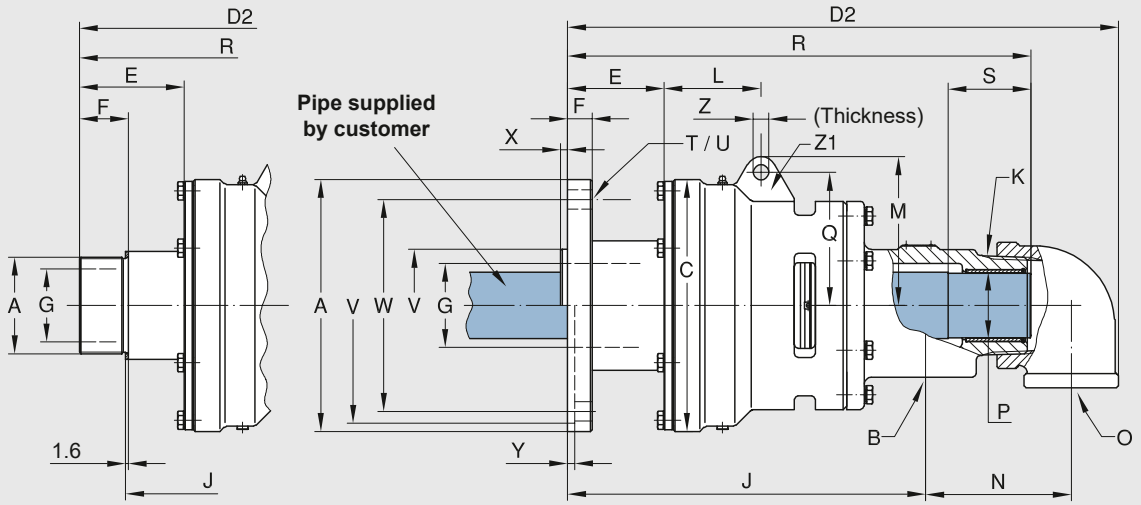

DN	B + O NPT	Ordering-No	A Rotor Connections	C Ø	D2	E	F	G Ø	J	K NPT	L	M	N	P Pipe
50	(2) x 1	6200-002-123	2 NPT RH	133	344	75	38	47.6	205	2	73	90	86	31.62 - 31.49
	(2) x 1	6200-002-137	G 2 RH	133	321	66	29	47.6	181	2	73	90	86	31.62 - 31.49
	(2) x 1	6200-002-139	G 2 LH	133	321	66	29	47.6	181	2	73	90	86	31.62 - 31.49
	(2) x 1	6200-002-115	Flange Ø228.6	133	337	82	25.4	47.6	223	2	73	90	86	31.62 - 31.49
65	(2) x 1 ½	6250-002-115	2 ½ NPT RH	178	412	84	38	60.3	247	2 ½	95	113	110	47.42 - 47.37
	(2) x 1 ½	6250-002-119	2 ½ NPT LH	178	412	84	38	60.3	247	2 ½	95	113	110	47.42 - 47.37
	(2) x 1 ½	6250-002-121	G 2 ½ RH	178	412	84	38	60.3	233	2 ½	95	113	110	47.42 - 47.37
	(2) x 1 ½	6250-002-123	G 2 ½ LH	178	412	84	38	60.3	233	2 ½	95	113	110	47.42 - 47.37
	(2) x 1 ½	6250-002-300	Flange Ø228.6	178	420	90	25.4	60.3	275	2 ½	95	113	110	47.42 - 47.37
80	(2) x 2	6300-002-157	3 NPT RH	229	509	98	48	73	310	3	88	135	132	58.62 - 68.47
	(2) x 2	6300-002-103	Flange Ø228.6	229	499	87	22.2	76	324	3	88	135	132	58.62 - 68.47
100	(2) x 2 ½	6400-031-330	Flange Ø276	280	550	78	22.2	101.6	350	4	95	156	144	69.72 - 69.65
	(2) x 2 ½	6400-040-330	Flange Ø276	280	549	78	22.2	101.6	350	4	95	156	144	74.80 - 74.34

DN	B + O NPT	Ordering-No	Q	R	S	T	U Ø	V ØPT	W Ø	X	Y	Z Ø	Z1	kg
50	(2) x 1	6200-002-123	78	271	48	–	–	–	–	–	–	12.7	25.4	13.2
	(2) x 1	6200-002-137	78	267	48	–	–	–	–	–	–	12.7	25.4	13.2
	(2) x 1	6200-002-139	78	267	48	–	–	–	–	–	–	12.7	25.4	13.2
	(2) x 1	6200-002-115	78	284	48	4 x 90°	17.5	211.25 - 211.20	162	–	6.4	12.7	25.4	18.2
65	(2) x 1 ½	6250-002-115	98	340	54	–	–	–	–	–	–	14.3	25.4	25.2
	(2) x 1 ½	6250-002-119	98	340	54	–	–	–	–	–	–	14.3	25.4	25.2
	(2) x 1 ½	6250-002-121	98	346	54	–	–	–	–	–	–	14.3	25.4	25.2
	(2) x 1 ½	6250-002-123	98	346	54	–	–	–	–	–	–	14.3	25.4	25.2
	(2) x 1 ½	6250-002-300	98	352	54	4 x 90°	17.5	211.25 - 211.20	162	–	6.4	14.3	25.4	31.8
80	(2) x 2	6300-002-157	121	411	75	–	–	–	–	–	–	14.3	25.4	55
	(2) x 2	6300-002-103	121	420	75	6 x 60°	17.5	101.700 - 101.695	192	6.4	–	14.3	25.4	55
100	(2) x 2 ½	6400-031-330	133	451	76	6 x 60°	20.6	120.625 - 120.600	228.6	7.5	–	16	32	77
	(2) x 2 ½	6400-040-330	133	446	100	6 x 60°	20.6	120.625 - 120.600	228.6	7.5	–	16	32	77

DEUBLIN

Rotary Union F Series
Water Service, DN 125

- Monoflow and duoflow design
- Self-supported Rotary Union
- Balanced mechanical seal:
  Carbon Graphite/Tungsten Carbide
- Two widely spaced ball bearings
- Labyrinth seal protects bearings
- Cast iron housing
- High corrosion resistant
- Steel flange rotor
- On-the-machine seal replacement capability
- Inlet/outlet flange:
  Standard DIN,
  Optional ANSI, JIS

For further information, please contact Deublin or your local representative.

Operating Data

Max. Water Pressure	150 PSI	10 bar
Max. Speed	750 rpm	750 min^{-1}
Max. Temperature	250 °F	121 °C

For higher temperature, please consult Deublin.

Operation at max. pressure combined with max. speed is not permissible
If operating conditions are marginal, please consult our Engineering Department

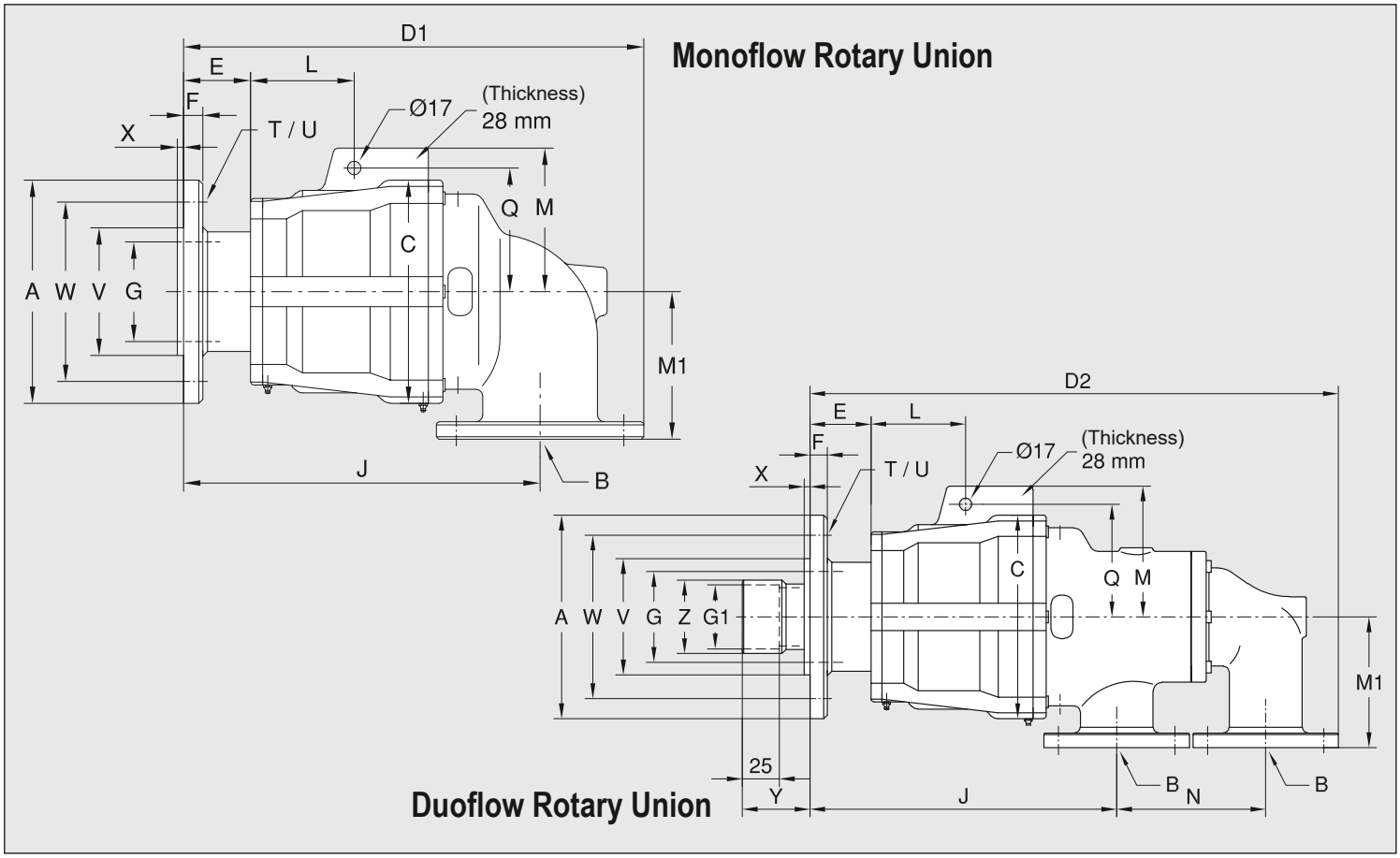

Monoflow Rotary Union

DN	B Flange	Ordering-No	A Ø	C Ø	D_1	E	F	G Ø	J	L	M	M1	Q	T	U Ø	V ØPT f8	W Ø	X	kg
125	DIN 125	F127-055-200	280	280	577	84	25	125	447	130	180	185	155	6 x 60°	18	160	225	8	100
	5" ANSI	F127-011-200	280	280	577	84	25	125	447	130	180	185	155	6 x 60°	18	160	225	8	100

Duoflow Rotary Union

DN	B Flange	Ordering-No	A Ø	C Ø	D_2	E	F	G Ø	G_1 Ø	J	L	M	M1	N	Q	T	U Ø	V ØPT f8	W Ø	X	Y	Z	kg
125	3" ANSI	F127-023-204701	280	280	820	84	25	125	88.3+0.1	422	130	180	180	205	155	6 x 60°	18	160	225	8	93	101	120

DEUBLIN

Rotary Union
Air or Hydraulic Oil Service, DN 6 - 40

- Monoflow design
- Self-supported Rotary Union
- Radial housing connection
- Balanced mechanical seal:
  Carbon Graphite/hardened Tool Steel or
  Carbon Graphite/Ceramic
- Felt oiler in seal cavity for air service
- Oiler for relubrication (3 - 5 drops/month)
- Low torque
- Weight optimised design
- Aluminium housing
- Stainless steel or steel rotor (respective of model)
- Lubrication guide see Instruction Manual

For further information, please contact Deublin or your local representative.

Operating Data

Max. Air Pressure			150 PSI	10 bar
Max. Vacuum			28" Hg	6.75 kPa
Max. Hydraulic Pressure	Model	1005	1,000 PSI	70 bar
		1102	1,000 PSI	70 bar
		1115	500 PSI	34 bar
		1205	750 PSI	50 bar
		250-094	1,000 PSI	70 bar
		355-021	1,000 PSI	70 bar
		452-000	750 PSI	50 bar
Max. Speed Straight Threads	Model	1005-1205	3,500 rpm	3,500 min^{-1}
		250-094	3,500 rpm	3,500 min^{-1}
		355-021	3,000 rpm	3,000 min^{-1}
		452-000	2,500 rpm	2,500 min^{-1}
Max. Speed NPT Threads			1,500 rpm	1,500 min^{-1}
Max. Temperature			250 °F	121 °C

For higher temperature, please consult Deublin.

Operation at max. pressure combined with max. speed is not permissible.

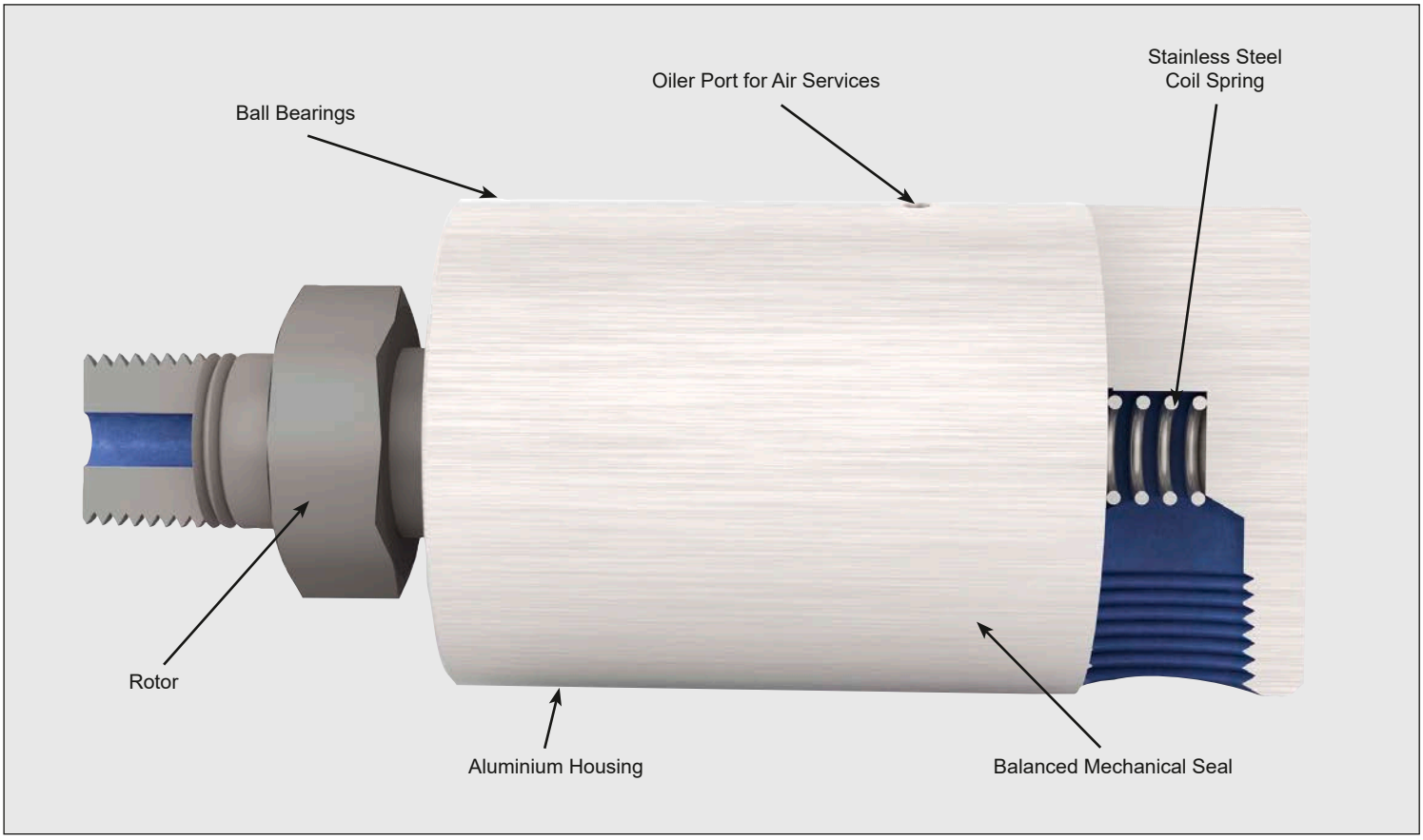

Monoflow Rotary Union

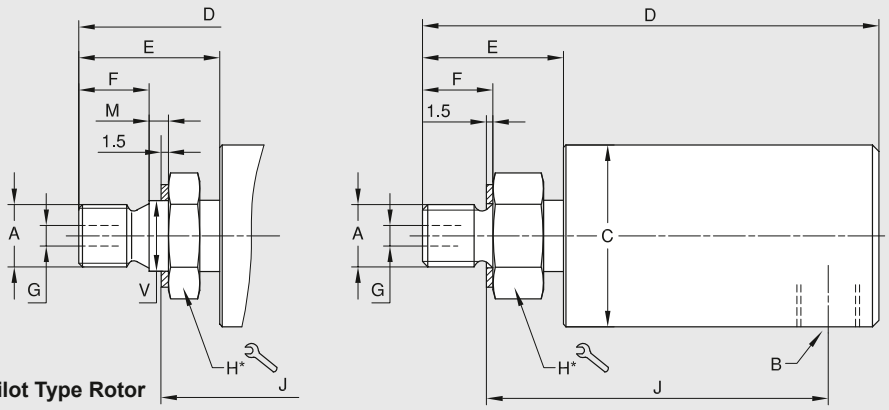

* DN 6 - 20 = hexagon
DN 25 - 40 = two wrench flats

Pilot Type Rotor

DN	B NPT	Ordering-No	A Rotor Connections		C Ø	D	E	F	G Ø	H	J	M	V Ø	kg
6	1/8	1005-020-019	3/8-24 UNF	RH	28.37	71	22	11.1	3.2	17	52	–	–	0.2
	1/8	1005-020-037	M 10 x 1	RH	28.37	71	22	11.1	3.2	17	54	–	–	0.2
	1/8	1005-020-038	1/8 NPT	RH	28.37	71	22	12.7	3.2	17	59	–	–	0.2
	1/8	1005-020-039	3/8-24 UNF	LH	28.37	71	22	11.1	3.2	17	52	–	–	0.2
	1/8	1005-020-045	M 10 x 1	RH	28.37	71	22	11	3.2	17	49	3	11.000 - 10.989	0.2
	1/8	1005-020-049	G 1/4	RH	28.37	71	22	13	3.2	17	52	–	–	0.2
	1/8	1005-113-063	1/8 NPT	RH	28.37	71	22	13	3.2	16	57	–	–	0.2
	1/8	1005-113-110	5/16-24 UNF		28.37	70	21	11	3	16	52	–	–	0.2
8	1/4	1102-070-029	5/8-18 UNF	RH	41	80.8	28.4	16	6.4	22	55.4	–	–	0.4
	1/4	1102-070-079	5/8-18 UNF	LH	41	80.8	28.4	16	6.4	22	55.4	–	–	0.4
	1/4	1102-070-081	1/4 NPT	RH	41	80.9	28.6	16	6.4	22	62.5	–	–	0.4
	1/4	1102-070-082	1/4 NPT	LH	41	80.9	28.6	16	6.4	22	62.5	–	–	0.4
	1/4	1102-070-103	G 1/4	RH	41	81	28	13	6.4	22	58	–	–	0.4
	1/4	1102-070-104	G 1/4	LH	41	81	28	13	6.4	22	58	–	–	0.4
10	3/8	1115-000-001	5/8-18 UNF	RH	44	100	27	16	8.7	24	72	–	–	0.7
	3/8	1115-000-002	3/8 NPT	RH	44	99	26	16	8.7	24	78	–	–	0.7
	3/8	1115-000-017	5/8-18 UNF	LH	44	100	27	16	8.7	24	72	–	–	0.7
	3/8	1115-000-200	M 16 x 2	RH	44	99	26	16	8.7	24	71	–	–	0.7
	3/8	1115-000-205	G 3/8	RH	44	100	27	16	8.7	24	72	–	–	0.7
15	1/2	1205-000-001	1-14 UNS	RH	57	112	33	19	16	36	78	–	–	0.7
	1/2	1205-000-003	1/2 NPT	RH	57	113	34	22	12.7	28	83.1	–	–	0.7
	1/2	1205-000-025	3/4-16 UNF	LH	57	114	35	19	12.7	28	79	–	–	0.7
	1/2	1205-000-039	3/4-16 UNF	RH	57	114	35	19	12.7	30	79	–	–	0.7
	1/2	1205-000-151	G 1/2	RH	57	114	34	19	12.7	30	79	–	–	0.7
	1/2	1205-000-152	G 1/2	LH	57	114	34	19	12.7	30	79	–	–	0.7
	1/2	1205-000-170	M 20 x 1.5	RH	57	115	36	14	12.7	30	79	5	21.993 - 21.980	0.7
20	3/4	250-094-002	1-14 UNS	RH	73	127	34	17	16.7	32	93	–	–	1.6
	3/4	250-094-012	M 22 x 1.5	RH	73	124	31	14	14.3	36	95	3	26.993 - 26.980	1.6
	3/4	250-094-016	1-14 UNS	RH	73	148	54	19.1	15.9	41	101	12.7	31.700 - 31.687	1.6
	3/4	250-094-020	3/4 NPT	RH	73	130	36.5	22	17.4	32	103	–	–	1.6
	3/4	250-094-284	G 3/4	RH	73	128	34	19	17.5	36	94	–	–	1.6
	3/4	250-094-285	G 3/4	LH	73	128	34	19	17.5	36	94	–	–	1.6
25	1	355-021-002	1 NPT	RH	82	157	49	28.6	25.4	38	117.3	–	–	2.1
	1	355-021-016	1 1/2-12 UNF	RH	82	167	59	19.1	25	38	107.8	12.7	39.649 - 39.637	2.1
	1	355-021-017	1 1/2-12 UNF	LH	82	167	59	19.1	25	38	107.8	12.7	39.649 - 39.637	2.1
	1	355-021-019	1 1/2-12 UNF	RH	82	156	48	27	25.4	38	107.2	–	–	2.1
	1	355-021-222	G 1	RH	82	151	42	22	25	36	108	–	–	2.1
40	1 1/2	452-000-001	1 1/2 NPT	RH	108	196	62	30	38	54	144	–	–	4.5
	1 1/2	452-000-198	G 1 1/2	RH	108	206	71	29	38	55	147	–	–	4.5
	1 1/2	452-000-395	2-12 UNF	RH	108	208	74	29	38	55	148	–	–	4.5

Deublin Rotary Unions – In-the-Shaft Mounted

To meet the specifications of engineering designs requiring minimum overhang, Deublin can provide unions which can be mounted in the shaft. With these models the only extensions beyond the end of the shaft are the supply line connections. Detailed drawings suggesting the application of these Deublin Rotary Unions to your installation will be submitted on request and without obligation.

Model 1005-000-001, DN 6

Operating Data		
Maximum Air Pressure	150 PSI	10 bar
Maximum Hydraulic Pressure	1,000 PSI	70 bar
Maximum Speed	3,500 RPM	3,500 /min
Maximum Temperature	250 °F	121 °C

** Dimensions of Shaft Bore

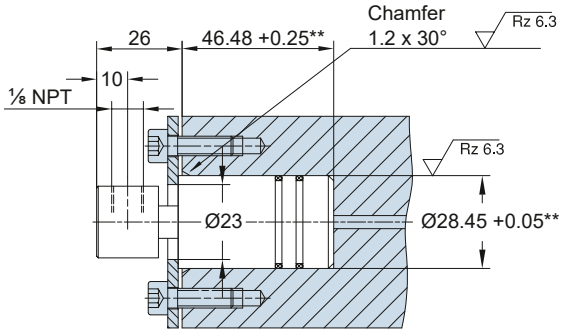

Model 1005-000-038, DN 6

Operating Data		
Maximum Air Pressure	150 PSI	10 bar
Maximum Hydraulic Pressure	1,000 PSI	70 bar
Maximum Speed	3,500 RPM	3,500 /min
Maximum Temperature	250 °F	121 °C

** Dimensions of Shaft Bore

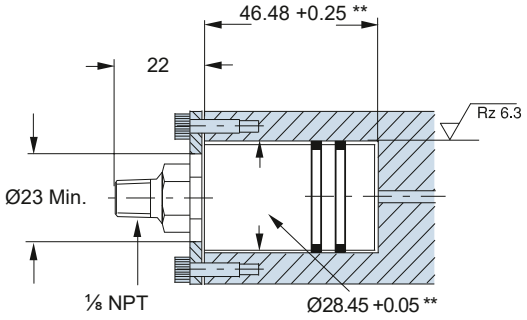

Model 1005-000-049, DN 6

Operating Data		
Maximum Air Pressure	150 PSI	10 bar
Maximum Hydraulic Pressure	1,000 PSI	70 bar
Maximum Speed	3,500 RPM	3,500 /min
Maximum Temperature	250 °F	121 °C

** Dimensions of Shaft Bore

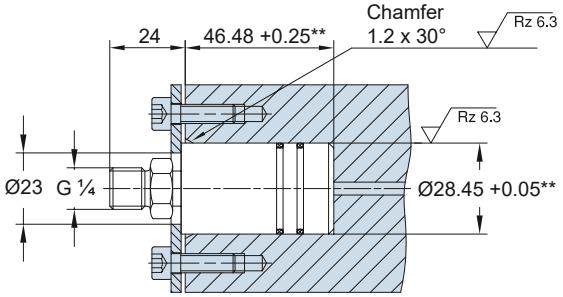

Model 1102-025-081, DN 8

Operating Data		
Maximum Air Pressure	150 PSI	10 bar
Maximum Hydraulic Pressure	1,000 PSI	70 bar
Maximum Speed	3,500 RPM	3,500 /min
Maximum Temperature	250 °F	121 °C

** Dimensions of Shaft Bore

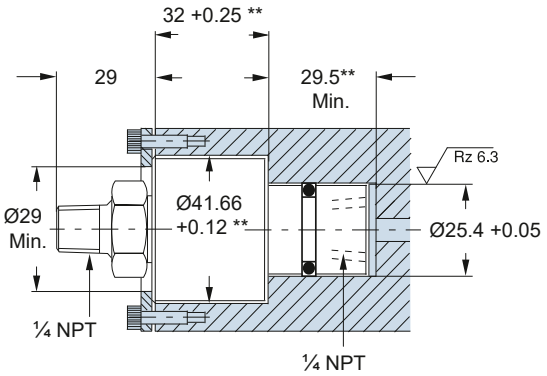

Deublin Rotary Unions – In-the-Shaft Mounted

To meet the specifications of engineering designs requiring minimum overhang, Deublin can provide unions which can be mounted in the shaft. With these models the only extensions beyond the end of the shaft are the supply line connections. Detailed drawings suggesting the application of these Deublin Rotary Unions to your installation will be submitted on request and without obligation.

Model 1102-025-103, DN 8

Operating Data		
Maximum Air Pressure	150 PSI	10 bar
Maximum Hydraulic Pressure	1,000 PSI	70 bar
Maximum Speed	3,500 RPM	3,500 /min
Maximum Temperature	250 °F	121 °C

** Dimensions of Shaft Bore

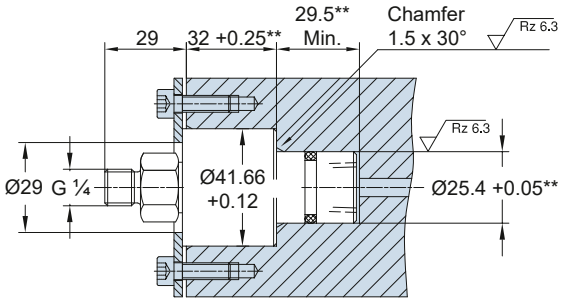

Model 1115-130-002, DN 10

Operating Data		
Maximum Air Pressure	150 PSI	10 bar
Maximum Hydraulic Pressure	500 PSI	34 bar
Maximum Speed	3,500 RPM	3,500 /min
Maximum Temperature	250 °F	121 °C

** Dimensions of Shaft Bore

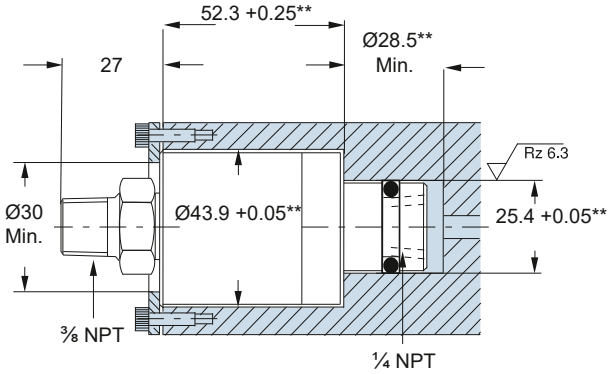

Model 1115-130-205, DN 10

Operating Data		
Maximum Air Pressure	150 PSI	10 bar
Maximum Hydraulic Pressure	500 PSI	34 bar
Maximum Speed	3,500 RPM	3,500 /min
Maximum Temperature	250 °F	121 °C

** Dimensions of Shaft Bore

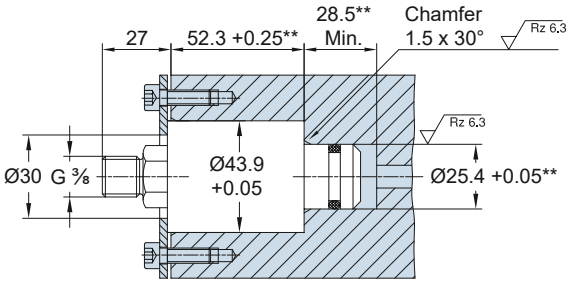

Model 1116-319-248, DN 10

Operating Data		
Maximum Hydraulic Pressure	1,000 PSI	70 bar
Maximum Speed	3,500 RPM	3,500 /min
Maximum Temperature	250 °F	121 °C

DO NOT RUN DRY

This model contains E.L.S. seals of silicon carbide to silicon carbide for long life on abrasive applications.

** Dimensions of Shaft Bore

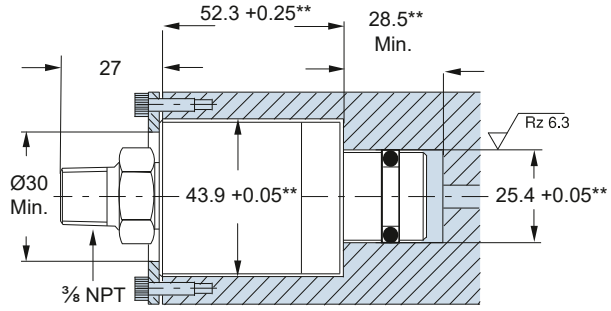

DEUBLIN

Rotary Union AP Series
Water or Hydraulic Oil Service,
DN 8 - 15

- Monoflow design
- Self supported Rotary Union
- Designed for high media pressure and high RPM
- Seals made of Tungsten Carbide
- Double row ball bearing, lubricated for life
- Vent holes
- Steel housing nickel-plated
- Stainless steel end cap and rotor
- All parts in media contact are stainless steel and corrosion resistant

For further information, please contact Deublin or your local representative.

Operating Data

Max. Hydraulic/Water Pressure*	5,800 PSI	400 bar
Max. Speed*	1,500 rpm	1,500 min^{-1}
Max. Temperature	194 °F	90 °C

For higher temperature, please consult Deublin.

* Operation at max. pressure combined with max. speed is not permissible.

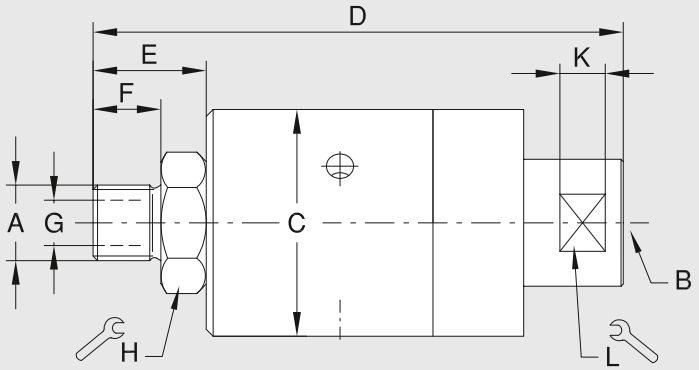

AP8 - AP12

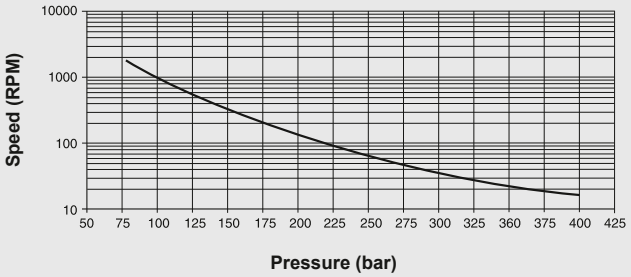

Monoflow Rotary Union

DN	B	Ordering-No	A Rotor Connections		C Ø	D	E	F	G Ø	H	K	L	kg
8	G ¼	AP8-010-210	G ¼ BSP	RH	50	117	25	15	7	27	10	25	0.8
10	G ⅜	AP10-010-210	G ⅜ BSP	RH	50	117	25	15	10	27	10	25	0.8
15	G ½	AP12-010-210	G ½ BSP	RH	50	122	30	20	12	27	10	25	1
	½ NPT	AP12-011-214	½ NPT	RH	50	122	30	20	12	27	10	25	1

DEUBLIN

Rotary Union 7100 Series
High Pressure Hydraulic Service, DN 8 - 20, Duoflow

- Duoflow design
- Self-supported Rotary Union
- Hydrostatic bearing design
- Wear-resistant bearing
- Vent for controlled drainage
- Shaft seal for secondary sealing
- Stainless steel housing
- Hardened steel rotor

For further information, please contact Deublin or your local representative.

Operating Data

Max. Hydraulic Pressure	3,630 PSI	250 bar
Min. Hydraulic Pressure	40 PSI	3 bar
Max. Speed	500 rpm	500 min^{-1}
Max. Temperature	158 °F	70 °C

Higher pressure and speed on request
For higher temperature, please consult Deublin.

Required Oil Cleanliness: class 17/15/12, ISO 4406:2017

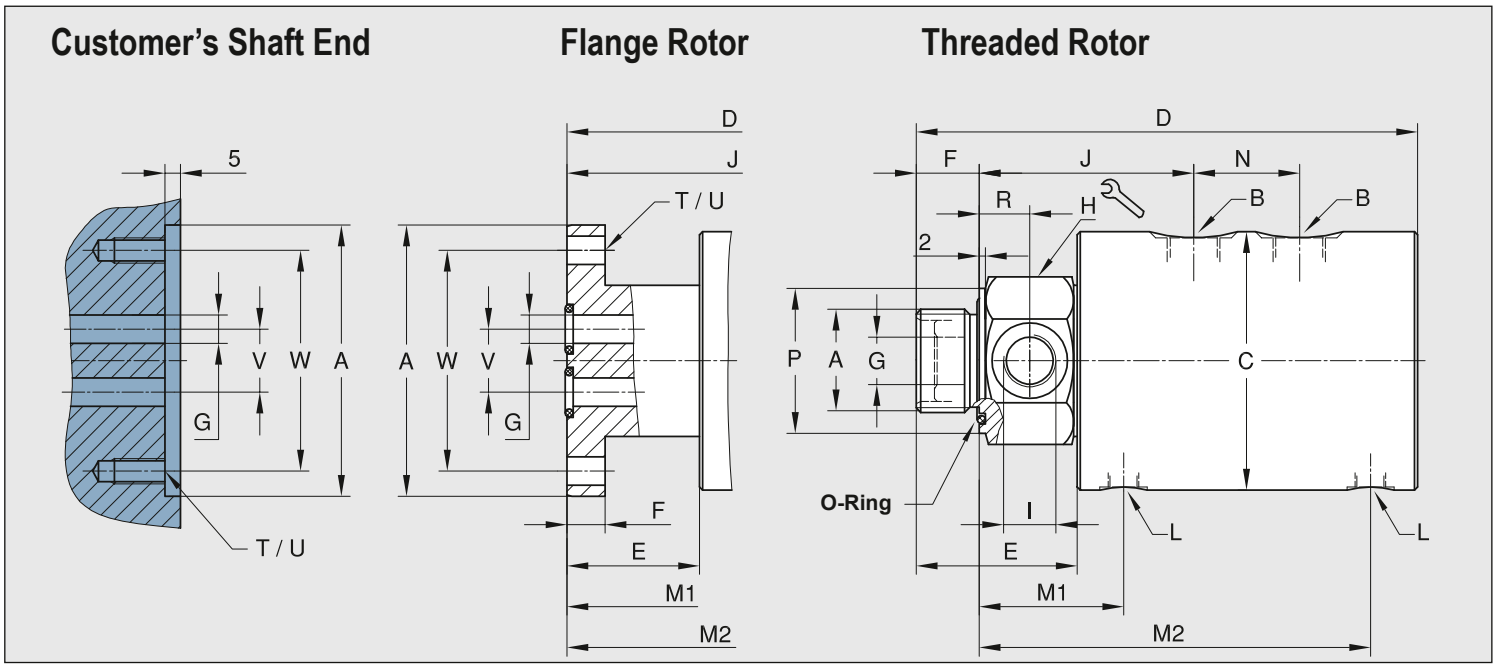

Duoflow Rotary Union

DN	B	Ordering-No	A Rotor Connections	C Ø	D	E	F	G Ø	H	I	J	L	M1/M2	N	P Ø	R	T	U Ø	V Ø	W Ø	kg
2 x 8	G ¼	7100-773	G ¾ RH	82	176	46	17	6.4	46	G ¼	76	G ⅛	49.5/137.5	36	46	15	–	–	–	–	4.5
	G ¼	7100-852	Flange Ø86 g6/H7	82	172	42	12	9	–	–	89	G ⅛	62/151	36	–	–	4 x 90°	9 M8	20	70	4.5
2 x 10	G ⅜	7100-777	G 1 RH	82	181	51	20	8	46	G ⅜	78	G ⅛	52/140	36	46	16	–	–	–	–	4.4
	G ⅜	7100-853	Flange Ø86 g6/H7	82	172	42	12	9	–	–	89	G ⅛	63/151	36	–	–	4 x 90°	9 M8	20	70	4.4
2 x 15	G ½	7100-711	G 1 ¼ RH	109	244	70	26	15	55	G ½	101	G ¼	70.5/180.5	50	55	18	–	–	–	–	11
	G ½	7100-854	Flange Ø108 g6/H7	109	230	56	16	12.5	–	–	113	G ¼	82.5/192.5	50	–	–	4 x 90°	11 M10	20.5	88	11
2 x 20	G ¾	7100-855	Flange Ø 148 g6/H7	148	288	78	25	19	–	–	153	G ½	110.5/253	60	–	–	6 x 60°	13.5 M12	33	126	28

DEUBLIN

Rotary Union
DEU-PLEX Air and Hydraulic Service, DN 8 - 20

- Duoflow design
- Tandem model as triple passage design
- Self-supported Rotary Union
- Composite bearing
- Vent holes between passages
- Carbon-filled teflon seals
- Hardened sealing surface
- Aluminium housing
- Steel rotor

For further information, please contact Deublin or your local representative.

Operating Data

Max. Air Pressure			150 PSI	10 bar
Max. Hydraulic Pressure*			3,050 PSI	210 bar
Max. Speed (short-term)*			250 rpm	250 min^{-1}
Torque for	Model	1690	7 ft.lbs	9.5 Nm
		1790	18 ft.lbs	24 Nm
		1890	22 ft.lbs	29.8 Nm
Max. Temperature			239 °F	115 °C

For higher temperature, please consult Deublin.

* Operation at max. pressure combined with max. speed is not permissible.

Models with inner rotors

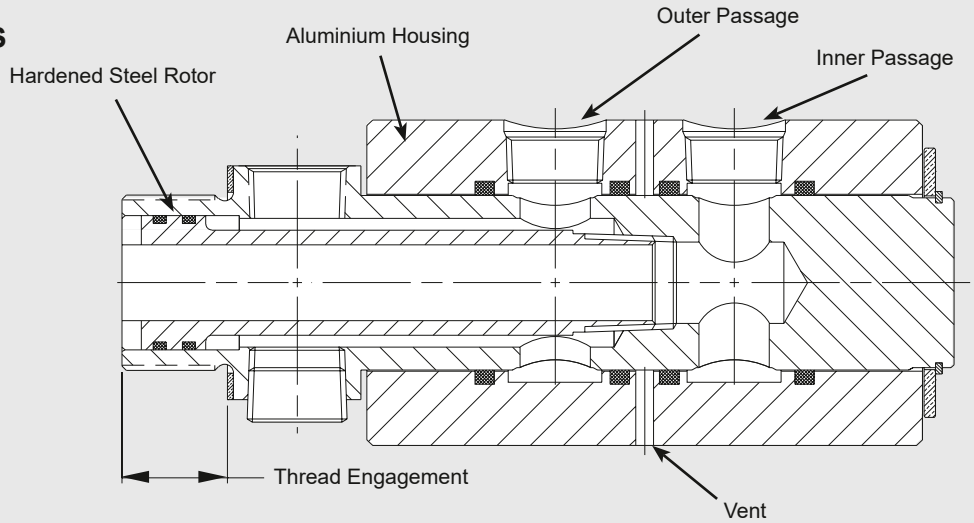

Models without inner rotors can be used for coaxial feed applications as shown below.

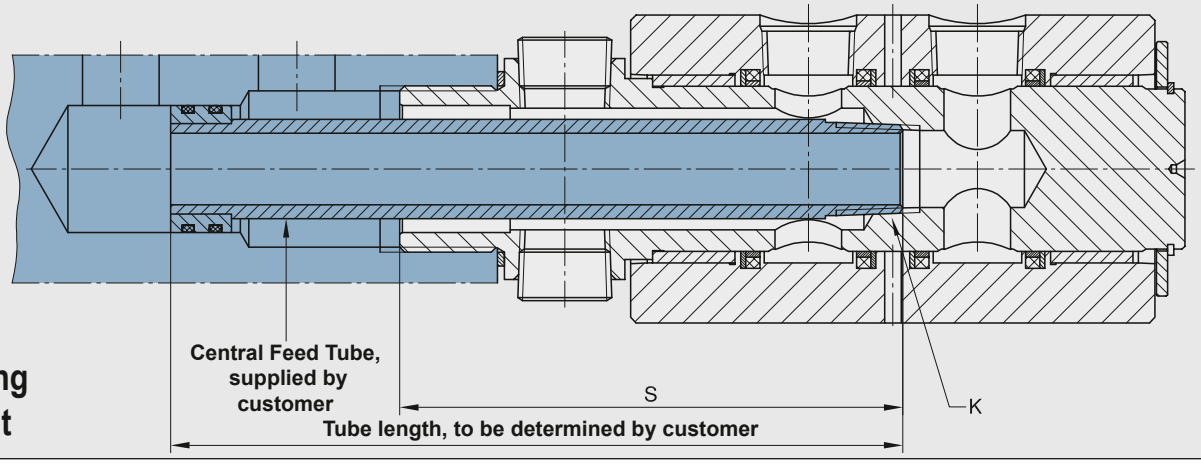

Illustration of a mounting arrangement

Duoflow Rotary Union

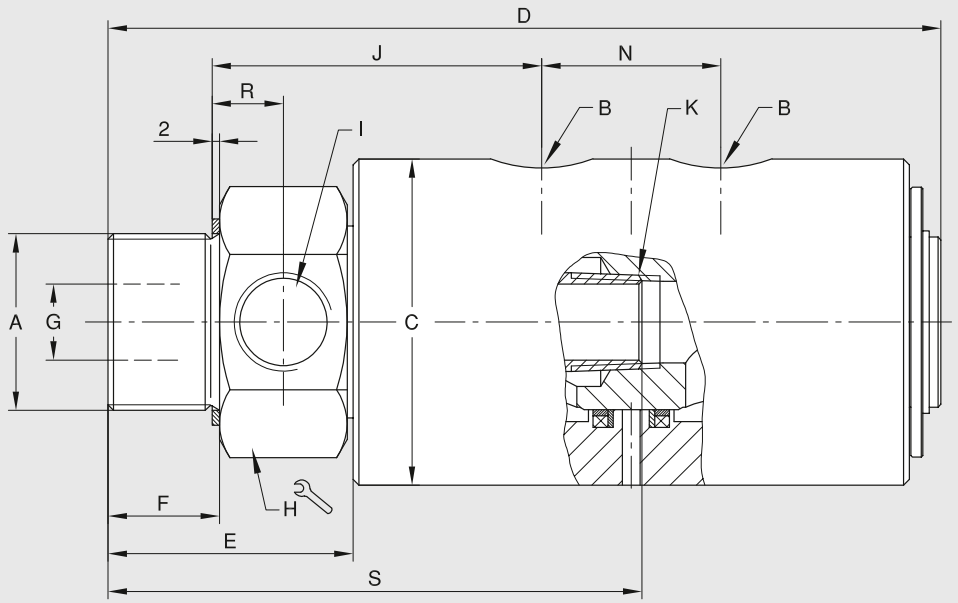

DN	B NPT	Ordering-No	A Rotor Connections	C Ø	D	E	F	G Ø	H	I NPT	J	K NPT	N	R	S	kg
2 x 8	¼	1690-000-102*	1 NPT	66.4	150	55	28.6	22	46	¼	66.6	¼	28.6	23	97.4	1.6
	¼	1690-000-105*	G 1 RH	66.4	150	55.5	18	8	46	¼	68	¼	29.5	19	97.4	1.6
	¼	1690-000-115	1 NPT	66.4	150	55	28.6	7.9	46	¼	66	–	29.5	23	–	1.6
	¼	1690-000-168	G 1 RH	66.4	150	55.5	18	17.5	46	¼	68	¼	29.5	19	–	1.6
2 x 15	½	1790-500-101*	1 ¼ NPT RH	76	208	63	28	27	55	½	85	½	42	18	–	3.1
	½	1790-500-112*	G 1 ¼ RH	76	208	63	28	27	55	½	85	½	42	18	129.4	3.1
	½	1790-500-113	1 ¼ NPT RH	76	208	63	28	16	55	½	85	½	42	18	129.4	3.1
	½	1790-500-114	G 1 ¼ RH	76	208	63	28	16	55	½	85	½	42	18	–	3.1
2 x 20	¾	1890-500	1 ½ NPT RH	87.6	225.4	66.6	30	20.6	65	¾	104	½	49	18	144.5	4.4
	¾	1890-560	G 1 ½ RH	87.6	226	66	30	20.6	65	¾	89	¾	49	19.5	–	4.4
	¾	1890-570*	G 1 ½ RH	87.6	226	66	30	34.9	65	¾	89	¾	49	19.5	149.4	4.2
	¾	1890-581	G 1 ½ RH	87.6	225.4	66.6	30	20.6	65	¾	69.9	¾	48.9	19.2	144.5	4.2

*These models are delivered without inner rotors.

Triple Passage Rotary Union

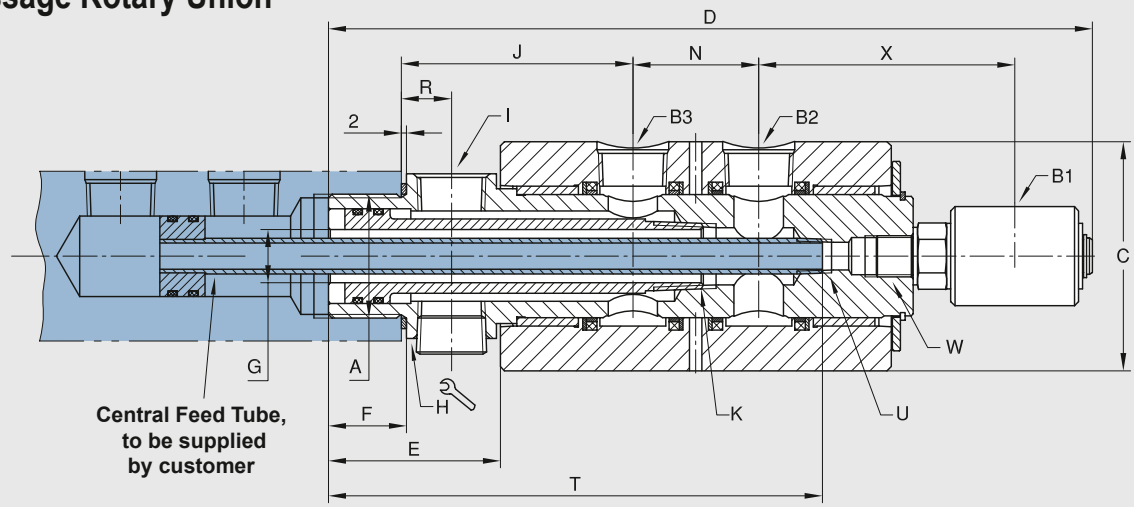

DN	B1 x B2 x B3 NPT	Ordering-No	A Rotor Connections	C Ø	D	E	F	G Ø	H	I NPT	J	K NPT	N	R	T	U NPT	W	X	kg
8/20/20	¼ x ¾ x ¾	1890-580	G 1 ½ RH	88.5	293	67	30	20.6	65	¾	89	¾	48.5	19.5	190	¼	⅝-18 UNF RH	98	4.7

DEUBLIN

Rotary Union
Air, Hydraulic Oil and Vacuum Service, DN 8 and 15

- Monoflow and duoflow (Tandem) design
- Self-supported Rotary Union
- No interpassage leakage on the duoflow design
- Hardened sealing surface
- Oilite bearing
- Aluminium housing
- Steel rotor

For further information, please contact Deublin or your local representative.

Operating Data

Max. Air Pressure	150 PSI	10 bar
Max. Vacuum	28 "Hg	6.75 kPa
Max. Hydraulic Pressure*	3,000 PSI	207 bar
Max. Speed (short-term)*	250 rpm	250 min^{-1}
Max. Temperature	250 °F	121 °C

For higher temperature, please consult Deublin.

* Operation at max. pressure combined with max. speed is not permissible.

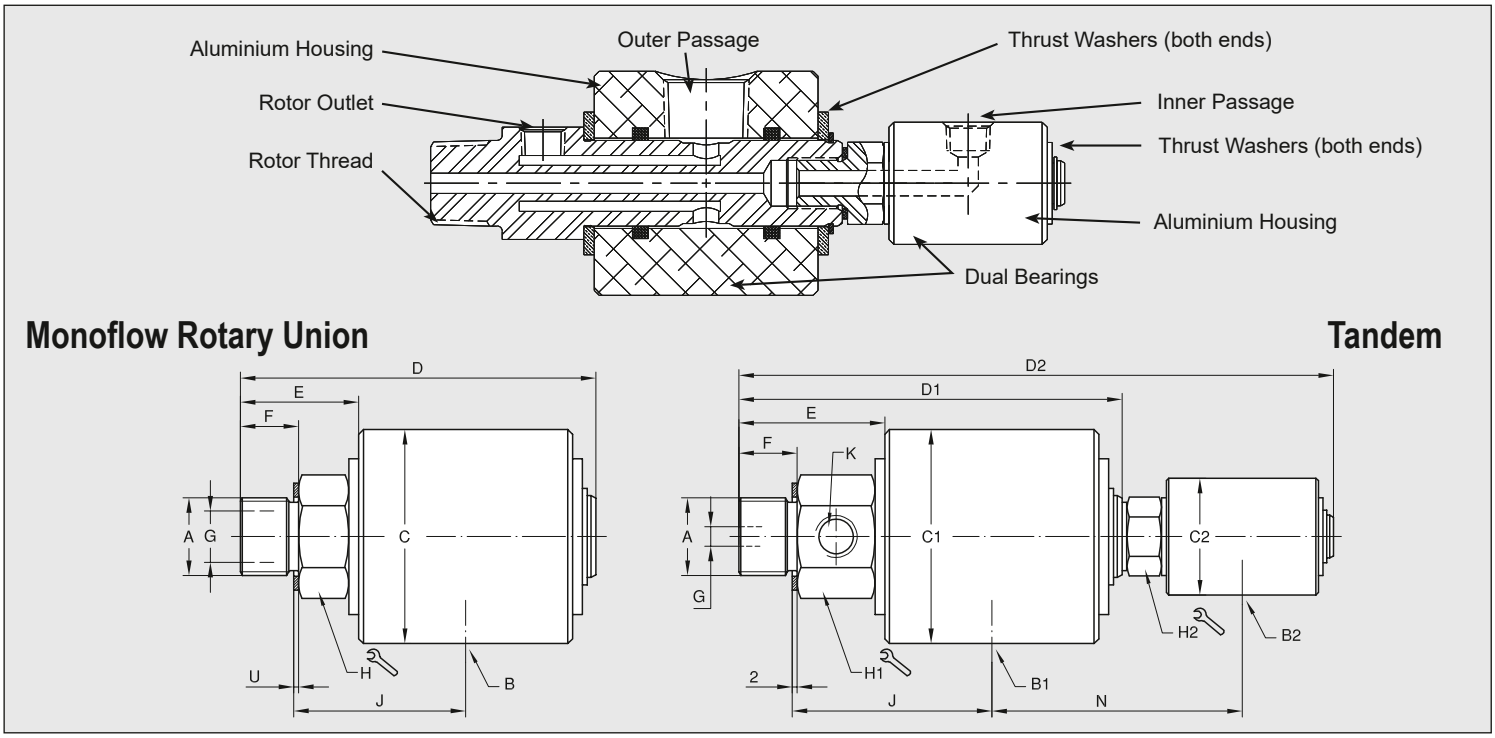

Monoflow Rotary Union

DN	B NPT	Ordering-No	A Rotor Connections		C Ø	D	E	F	G Ø	H	J	U	kg
8	¼	17-025-012	⅝-18 UNF	RH	38	83.3	29	16	8	22	39	1.5	0.3
	¼	17-025-039	G ⅜	RH	38	83.3	29	16	8	22	39	1.5	0.3
	¼	17-025-041	⅜ NPT	RH	38	83.3	29	16	8	22	46	–	0.3
	¼	17-025-045	⅜ NPT (FEM)	RH	38	75.4	21	–	8	22	38	–	0.3
	¼	17-025-046	M16 x 2	RH	38	83.3	29	16	8	22	39	1.5	0.3
15	½	21-001-101	¾ NPT	RH	70	119	41.7	22	16	36	66.4	–	1.2
	½	21-001-122	G ¾	RH	70	116	38.7	19	16	36	56.2	1.6	1.2

Duoflow Rotary Union (Tandem)

DN	B_1 x B_2 NPT	Ordering-No	A Rotor Connections		C_1 Ø	C_2 Ø	D_1	D_2	E	F	G Ø	H_1	H_2	J	K NPT	N	kg
15 x 8	½ x ¼	2117-001-103	1-14 UNS	RH	70	38	125	194	48	19	6.4	36	22	65	¼	82	1.5
	½ x ¼	2117-001-105	G ¾	RH	70	38	125	194	48	19	6.4	36	22	66	¼	81	1.5
	½ x ¼	2117-001-109	¾ NPT		70	38	128	194	51	22	6.4	36	22	71	¼	82	1.5

DEUBLIN

Rotary Union
1379 and 1479 Series 4-Passage for Various Media

- Four independent passages for applications such as clamping and unclamping, work piece or tool sensing, and spindle cooling
- Vent between passages 2 and 3 allows use of two different media without cross contamination. For example, air in passages 1 and 2 and hydraulic oil in passages 3 and 4
- Stainless steel and brass components resist corrosion
- Hardened chrome sealing surface and elastomer-energized seals
- Dual, widely spaced ball bearings absorb large side loads

For further information, please contact Deublin or your local representative.

Operating Data

Max. Air Pressure		150 PSI	10 bar
Max. Hydraulic Pressure (rotating)*		850 PSI	60 bar
Max. Hydraulic Pressure (very slow rotating)		3,600 PSI	250 bar
Max. Vacuum		28 "Hg	6.75 kPa
Max. Speed		250 rpm	250 min^{-1}
Max. Flow per Passage	1379 series	14 gpm	53 l/min
	1479 series	28.5 gpm	108 l/min
Max. Temperature		175 °F	80 °C

For higher temperature, please consult Deublin.

* Operating conditions vary depending on the application and must be adjusted so as not to exceed the maximum union housing temperature rating of 90 °C / 194 °F.

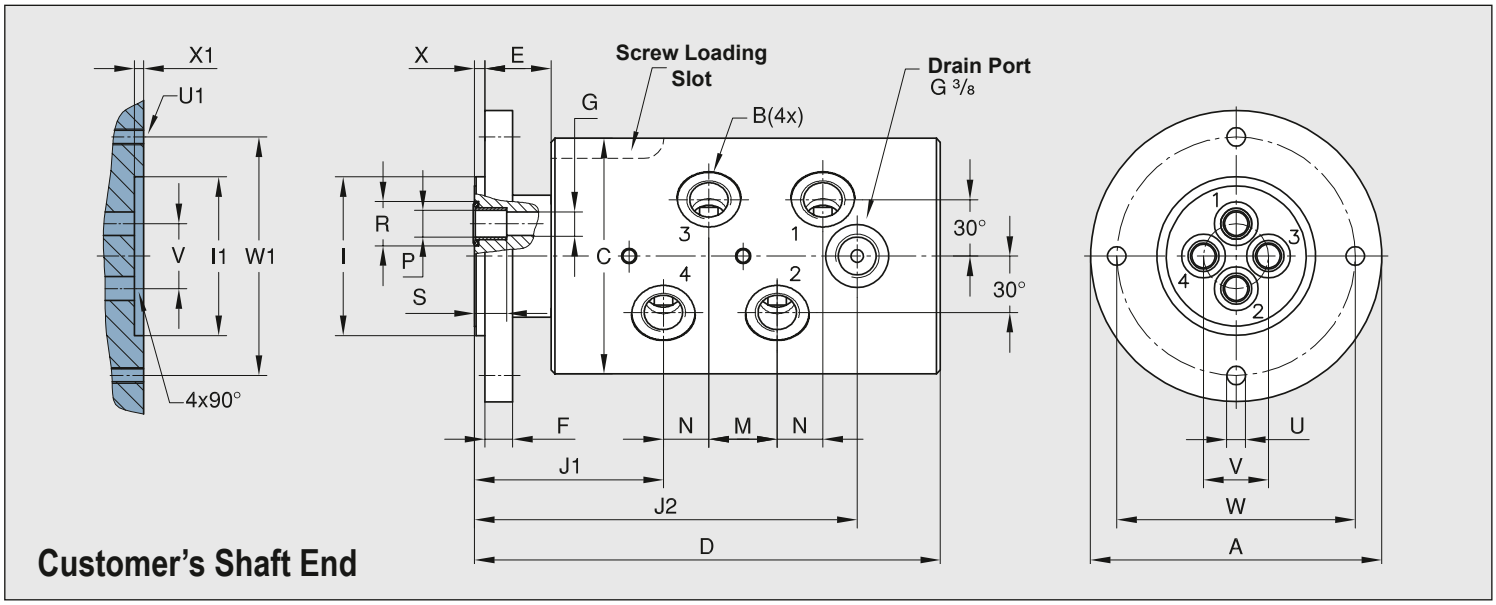

4-Passage Rotary Union

DN	B	Ordering No	A Ø	C Ø	D	E	F	G Ø	I ØPT	I1 ØPT	J1	J2	M	N	P Ø	R Ø	S	U Ø	U1	V Ø	W Ø	X	X1	W1 Ø	kg
4 x 10	G 3/8	1379-160	110	88	176	25	11	9	60.000 59.981	60.060 60.030	71	145	26	17	12	16.7	12	7.2	M6 4x90°	24.5	90	4	3.5	90	7.6
4 x 10	3/8 NPT	1379-460	110	88	176	25	11	9	60.000 59.981	60.060 60.030	71	145	26	17	12	16.7	12	7.2	M6 4x90°	24.5	90	4	3.5	90	7.6
4 x 10 + centr. Pass	G 3/8	1379-860	110	88	176	25	11	9	60.000 59.981	60.060 60.030	71	145	26	17	12	16.7	12	7.2	M6 4x90°	24.5	90	4	3.5	90	7.6
4 x 15	G 1/2	1479-100	130	108	202	25	13.5	13	75.000 74.981	75.060 75.030	79.5	172	31	23	13	19.7	15	9	M8 4x90°	29	110	4	3.5	110	12.7
4 x 15	1/2 NPT	1479-400	130	108	202	25	13.5	13	75.000 74.981	75.060 75.030	79.5	172	31	23	13	19.7	15	9	M8 4x90°	29	110	4	3.5	110	12.7
4 x 15 + centr. Pass.	G 1/2	1479-800	130	108	202	25	13.5	13	75.000 74.981	75.060 75.030	79.5	172	31	23	13	19.7	15	9	M8 4x90°	29	110	4	3.5	110	12.7

DEUBLIN

Rotary Union
DEU-PLEX Air Service, DN 10

- Duoflow design
- Self-supported Rotary Union
- Flange rotor
- Radial housing connections
- Low torque
- Double-balanced mechanical seal
- Full-media flow
- Oiler for relubrication (3 - 5 drops/month)
- Aluminium housing
- Cast iron rotor
- Lubrication guide page 45

For further information, please contact Deublin or your local representative.

Operating Data

Max. Air Pressure	150 PSI	10 bar
Max. Vacuum	28 "Hg	6.75 kPa
Max. Speed	1,500 rpm	1,500 min^{-1}
Max. Temperature	250 °F	121 °C

For higher temperature, please consult Deublin.

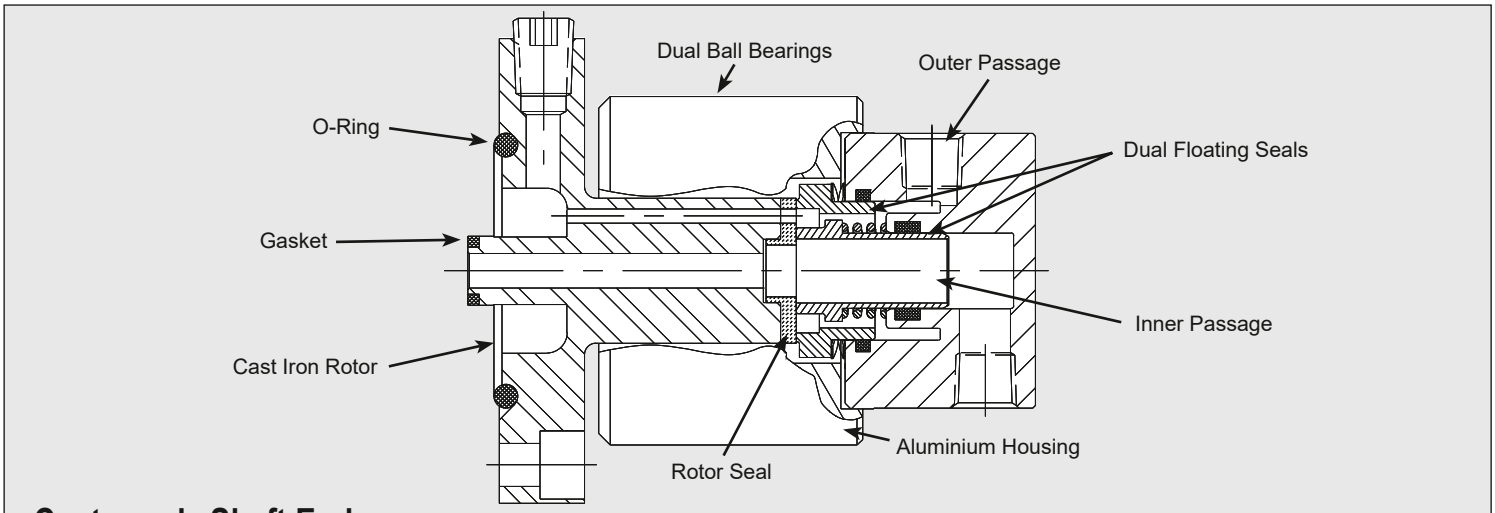

Customer's Shaft End

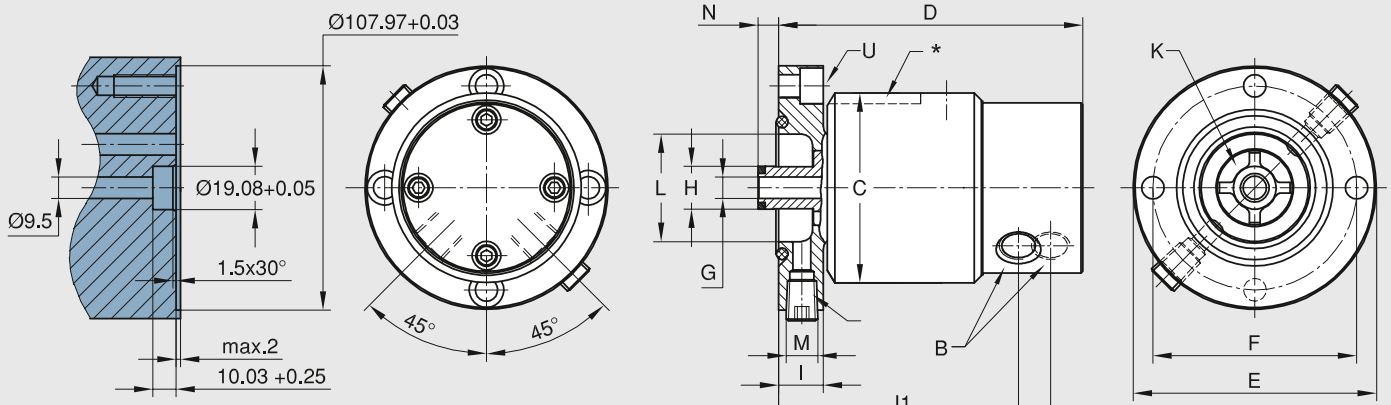

U = Clearance for Socket Head Cap Screws (DIN 912)

*** Screw loading Slot**

DN	B NPT	Ordering-No	C Ø	D	E ØPT	F Ø	G mm²	H Ø	I	J1	J2	K mm²	L Ø	M NPT	N	U Screws DN 912	kg
2 x 10	3/8	1500-000	84	135	108.0 107.9	90.5	71	19.05 19.00	20	106	121	150	48	2 x 1/4	11.1	3/8-16	3
	3/8	1500-250	84	135	107.95 107.92	90.5	71	19.05 19.00	20	106	121	150	48	2 x 1/4	11.2	M10	3

DEUBLIN

Rotary Union
DEU-PLEX Air and Hydraulic Oil Service, DN 15

- Duoflow design
- Self-supported Rotary Union
- Radial and axial housing connections
- Full-media flow
- Oiler for relubrication (3 - 5 drops/month)
- Aluminium housing
- Cast iron flange rotor
- Double-balanced mechanical seal – standard: Carbon Graphite/Ceramic
- Lubrication guide page 45

Operating Data

Max. Air Pressure[1]	(1590)	150 PSI	10 bar
Max. Hydraulic Pressure[2]	(1579)		
Outer passage		500 PSI	34 bar
Inner passage		1,020 PSI	70 bar
Max. Speed		1,500 rpm	1,500 min^{-1}
Max. Temperature		250 °F	121 °C

For higher temperature, please consult Deublin.

For further information, please contact Deublin or your local representative.

[1] Only one passage should be pressurized at a time.
[2] Operation at max. pressure combined with max. speed is not permissible. For the higher pressure use inner passage only.

Typical Adapter Mounting Arrangement

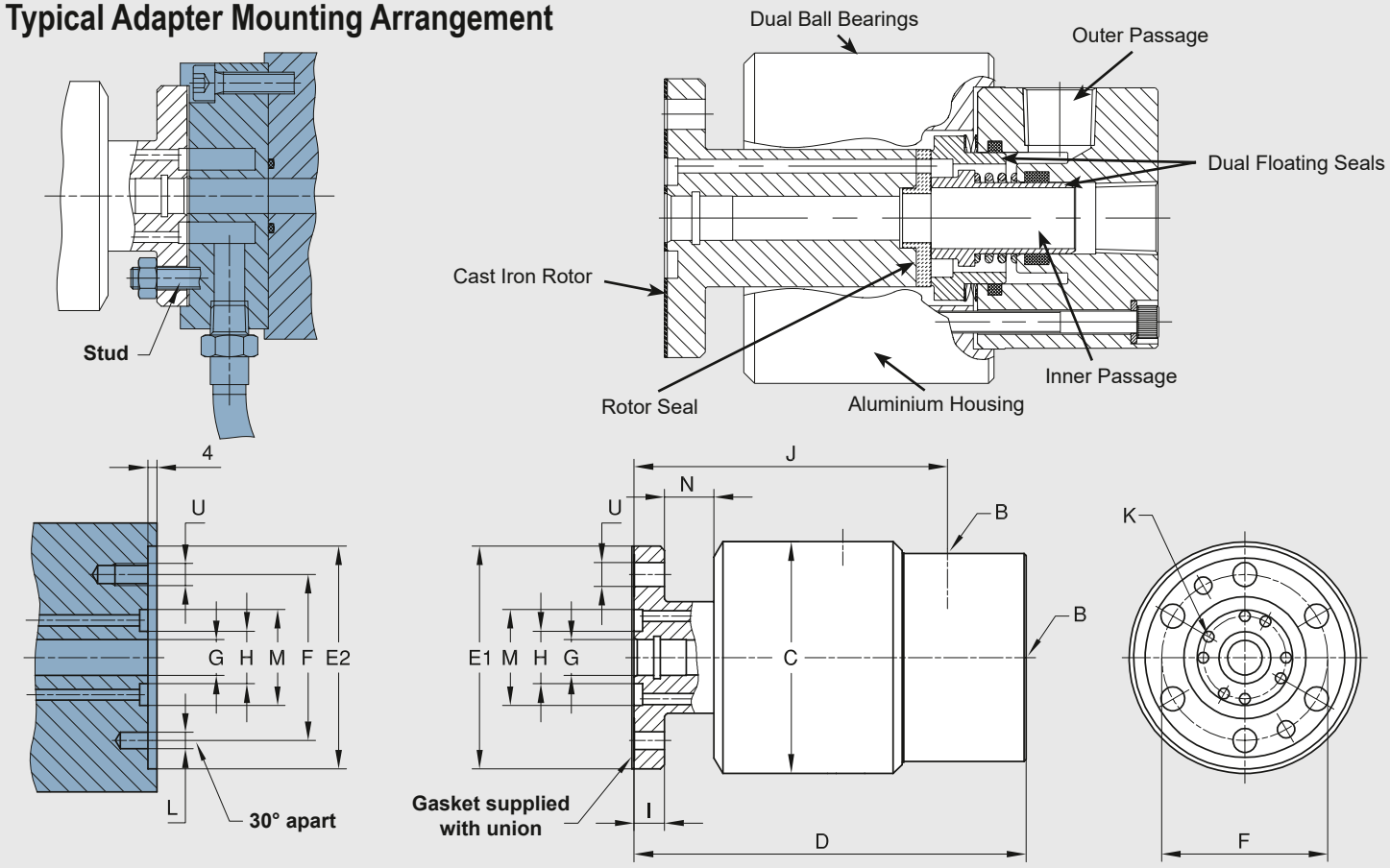

DN	B NPT	Ordering-No	Media	C Ø	D	E1 ØPT	E2 Ø	F Ø	G mm²	H Ø	I	J	K mm²	L Ø dowel pin	M Ø	N	U Ø	kg
2 x 15	½	1579-000	Hydraulic Oil	84	143	81.000 80.988	81.050 81.020	60.3	126	19	11	114	100	6	35	18	8.7 M8	2.5
	½	1579-041	Hydraulic Oil	84	143	81.000 80.988	81.050 81.020	60.3	126	19	11	114	100	6	35	18	8.7 M8	2.5
	½	1579-074	Hydraulic Oil	96	143	81.000 80.988	81.050 81.020	60.3	126	19	11	113	100	6	35	12	8.7 M8	3.1
	½	1590-000	Air	84	143	81.000 80.988	81.050 81.020	60.3	126	19	11	114	100	6	35	18	8.7 M8	2.5

DEUBLIN

Rotary Union
BC-54000 Series
Water, Steam & Hot Oil Service, Fixed Siphon

- Duoflow, fixed siphon design
- Two widely spaced Carbon Bearings provide greater support to the siphon pipe and hoses
- Carbon Seal placed under compression add strength and shock resistance
- External seal wear indicator allows for planned maintenance reducing expensive downtime
- Cast Iron Housing
- Ferrous Rotor and End Cap

For further information, please contact Deublin or your local representative.

Operating Data

Max. Water or Steam Pressure	½ to 1 ½	250 PSI	17.2 bar
	2 to 3	225 PSI	15.5 bar
Max. Hot Oil Pressure	½ to 3	100 PSI	6.9 bar
Max. Speed	½ to 1 ½	400 rpm	400 min^{-1}
	2 to 3	350 rpm	350 min^{-1}
Max. Water Temperature		406 °F	208 °C
Max. Hot Oil Temperature		446 °F	232 °C

For higher temperature, please consult Deublin.

Duoflow Rotary Union with Fixed Siphon

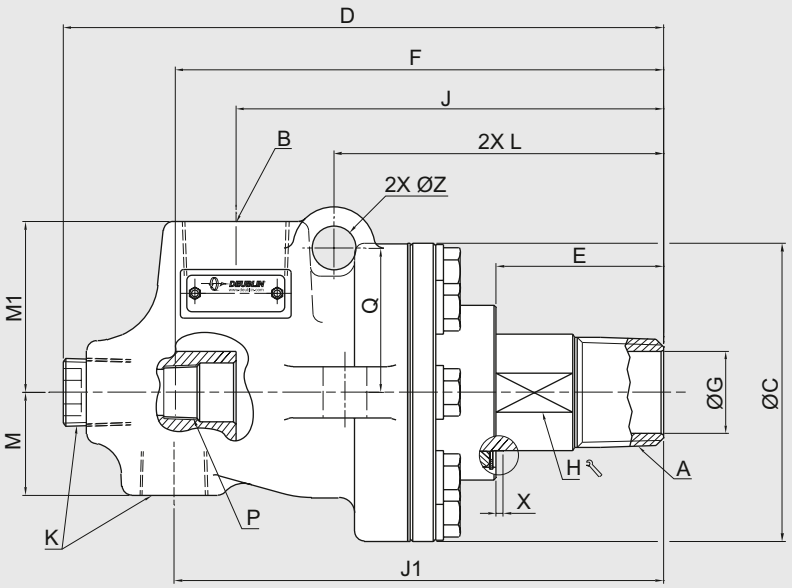

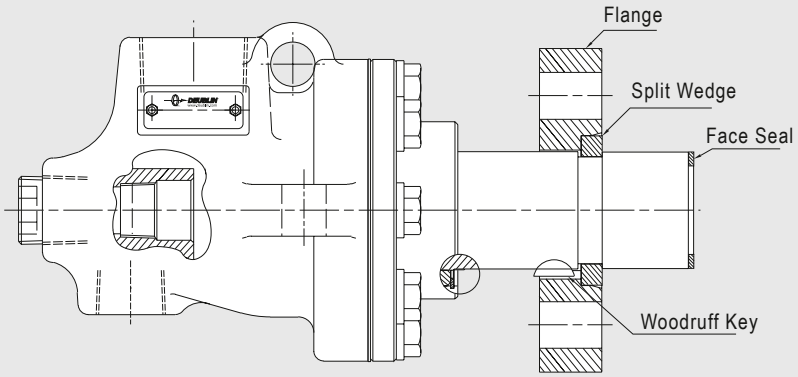

"CF" Connection
BC-54XXX-XX-30

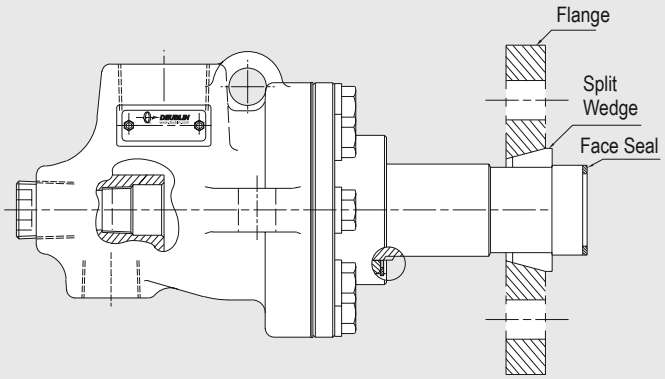

Quick Release Connection
BC-54XXX-XX-32

Journal Dimensions

Joint Size	CF Connection		Quick Release Connection	
	ØA	B	ØA	B
1 ½	53.31 - 53.24	26.7	47.60 - 47.70	9.5
2	69.19 - 69.11	26.7	58.98 - 59.08	12.7
2 ½	78.71 - 78.63	26.7	72.19 - 72.29	15.9
3	94.59 - 94.51	26.7	87.18 - 87.28	22.2

Quick Release Flanges and split wedges are available.
Contact Deublin for more information.

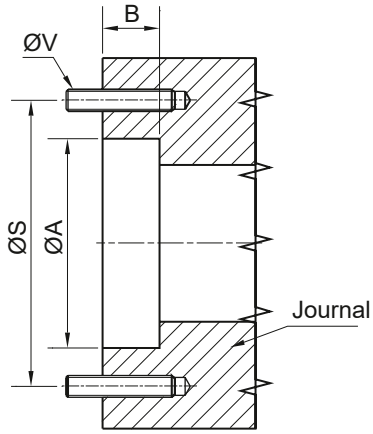

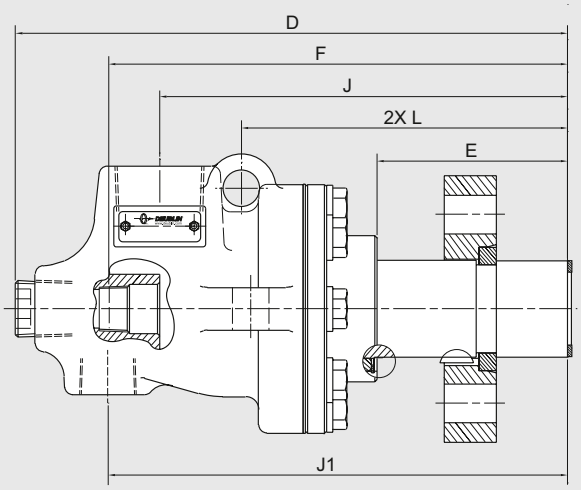

"CF" Connection
BC-54XXX-XX-30

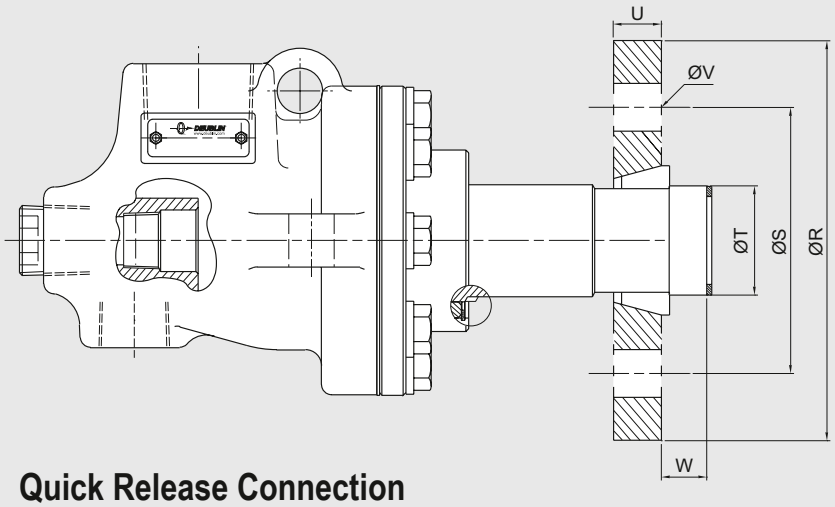

Quick Release Connection
BC-54XXX-XX-32

BC-54000 Series, Fixed Siphon

DN	Hot Oil Part Number	Water or Steam Part Number	A	B	ØC	D	E	F	ØG	H	J	J1	K
15	BC-54000-08-20	BC-54000-08-50	½ NPT RH	½ NPT	76	154	43	124	12.7	22.1	115	136	¼ NPT
	BC-54000-08-21	BC-54000-08-51	½ NPT LH	½ NPT	76	154	43	124	12.7	22.1	115	136	¼ NPT
20	BC-54000-12-20	BC-54000-12-50	¾ NPT RH	¾ NPT	86	160	43	132	19	27.6	115	131	½ NPT
	BC-54000-12-21	BC-54000-12-51	¾ NPT LH	¾ NPT	86	160	43	132	19	27.6	115	131	½ NPT
25	BC-54000-16-20	BC-54000-16-50	1 NPT RH	1 NPT	92	184	52	151	25	33.7	132	151	½ NPT
	BC-54000-16-21	BC-54000-16-51	1 NPT LH	1 NPT	92	184	52	151	25	33.7	132	151	½ NPT
	BC-54000-16-20B	BC-54000-16-50B	1 BSPT RH	1 BSPT	92	184	52	151	25	33.7	132	151	½ BSPT
	BC-54000-16-21B	BC-54000-16-51B	1 BSPT LH	1 BSPT	92	184	52	151	25	33.7	132	151	½ BSPT
32	BC-54000-20-20	BC-54000-20-50	1 ¼ NPT RH	1 ¼ NPT	111	226	48	179	32	42.9	170	178	¾ NPT
	BC-54000-20-21	BC-54000-20-51	1 ¼ NPT LH	1 ¼ NPT	111	226	48	179	32	42.9	170	178	¾ NPT
	–	BC-54000-20-50B	1 ¼ BSPT RH	1 ¼ BSPT	111	226	48	179	32	42.9	170	178	¾ BSPT
40	BC-54000-24-20	BC-54000-24-50	1 ½ NPT RH	1 ½ NPT	121	237	54	186	38.1	49.28	179	190	¾ NPT
	BC-54000-24-21	BC-54000-24-51	1 ½ NPT LH	1 ½ NPT	121	237	54	186	38.1	49.28	179	190	¾ NPT
	BC-54000-24-20B	BC-54000-24-50B	1 ½ BSPT RH	1 ½ BSPT	121	237	54	186	38.1	49.28	179	190	¾ BSPT
	–	BC-54000-24-60	CF	1 ½ NPT	121	273	90	222	38.1	–	215	226	¾ NPT
	–	BC-54000-24-62	QR	1 ½ NPT	121	273	90	222	38.1	–	215	226	¾ NPT
	–	BC-54000-24-62B	QR	1 ½ BSPT	121	273	90	222	38.1	–	215	226	¾ BSPT
50	BC-54000-32-20	BC-54000-32-50	2 NPT RH	2 NPT	152	294	56	215	48	60.45	205	219	1 ¼ NPT
	–	BC-54000-32-51	2 NPT LH	2 NPT	152	294	56	215	48	60.45	205	219	1 ¼ NPT
	–	BC-54000-32-60	CF	2 NPT	152	331	93	251	48	–	242	256	1 ¼ NPT
65	BC-54000-40-20	BC-54000-40-50	2 ½ NPT RH	2 ½ NPT	172	340	74	253	57.2	74.5	248	257	1 ¼ NPT
	–	BC-54000-40-51	2 ½ NPT LH	2 ½ NPT	172	340	74	253	57.2	74.5	248	257	1 ¼ NPT
	–	BC-54000-40-60	CF	2 ½ NPT	172	356	90	270	57.2	–	263	272	1 ¼ NPT
80	–	BC-54000-48-50	3 NPT RH	3 NPT	200	358	78	274	73	89.5	271	276	1 ½ NPT
	–	BC-54000-48-51	3 NPT LH	3 NPT	200	358	78	274	73	89.5	271	276	1 ½ NPT
	–	BC-54000-48-62	QR	3 NPT	200	369	91	285	73	89.5	284	287	1 ½ NPT

* BSPT Models are not supplied with siphon bushing

L	M	M1	P	P with bushing	Q	ØR	ØS	ØT	U	4 X ØV	W	X	ØZ	kg	DN
–	30	42	1/8 NPT	–	–	–	–	–	–	–	–	4.8	–	1.59	15
–	30	42	1/8 NPT	–	–	–	–	–	–	–	–	4.8	–	1.59	
–	32	44	1/4 NPT	1/8 NPT	–	–	–	–	–	–	–	4.8	–	2.27	20
–	32	44	1/4 NPT	1/8 NPT	–	–	–	–	–	–	–	4.8	–	2.27	
102	32	53	3/8 NPT	1/4 NPT	44	–	–	–	–	–	–	6.3	13.5	2.72	25
102	32	53	3/8 NPT	1/4 NPT	44	–	–	–	–	–	–	6.3	13.5	2.72	
102	32	53	3/8 BSPT	–	44	–	–	–	–	–	–	6.3	13.5	2.72	
102	32	53	3/8 BSPT	–	44	–	–	–	–	–	–	6.3	13.5	2.72	
111	45	56	1/2 NPT	3/8 NPT	53	–	–	–	–	–	–	6.3	16	5.9	32
111	45	56	1/2 NPT	3/8 NPT	53	–	–	–	–	–	–	6.3	16	5.9	
111	45	56	1/2 BSPT	–	53	–	–	–	–	–	–	6.3	16	5.9	
120	52	62	3/4 NPT	1/2 NPT	57	–	–	–	–	–	–	6.3	16	6.8	40
120	52	62	3/4 NPT	1/2 NPT	57	–	–	–	–	–	–	6.3	16	6.8	
120	52	62	3/4 BSPT	–	57	–	–	–	–	–	–	6.3	16	6.8	
156	52	62	3/4 NPT	1/2 NPT	57	124	92	53.14 ± 0.02	19	17	26.2	6.3	16	8.62	
156	52	62	3/4 NPT	1/2 NPT	57	–	–	–	–	–	–	6.3	16	6.8	
156	52	62	3/4 BSPT	–	57	–	–	–	–	–	–	6.3	16	6.8	
127	65	70	3/4 NPT	1/2 NPT	70	–	–	–	–	–	–	7.9	16	11.79	50
127	65	70	3/4 NPT	1/2 NPT	70	–	–	–	–	–	–	7.9	16	11.79	
164	65	70	3/4 NPT	1/2 NPT	70	140	108	68.96 ± 0.02	19	17.35	26	7.9	16	14.06	
161	64	76	1 NPT	3/4 NPT	78	–	–	–	–	–	–	6.3	19	14.97	65
161	64	76	1 NPT	3/4 NPT	78	–	–	–	–	–	–	6.3	19	14.97	
176	64	76	1 NPT	3/4 NPT	78	149	117.4	78.49 ± 0.02	19	17.35	26	6.3	19	18.14	
168	73	92	1 1/2 NPT	1 NPT	92	–	–	–	–	–	–	6.35	24	20.41	80
168	73	92	1 1/2 NPT	1 NPT	92	–	–	–	–	–	–	6.35	24	20.41	
181	73	92	1 1/2 NPT	1 NPT	92	–	–	87.15 ± 0.02	–	–	–	6.35	24	20.41	

DEUBLIN

Rotary Union
BC-54100 Series
Water, Steam & Hot Oil Service, Monoflow

- Monoflow design
- Carbon Seal placed under compression add strength and shock resistance
- External seal wear indicator allows for planned maintenance reducing expensive downtime
- Cast Iron Housing
- Ferrous Rotor and End Cap

For further information, please contact Deublin or your local representative.

Operating Data

Max. Water or Steam Pressure	½ to 1½	250 PSI	17.2 bar
Max. Hot Oil Pressure	½ to 1½	100 PSI	6.9 bar
Max. Speed	½ to 1½	400 rpm	400 min^{-1}
Max. Water Temperature		406 °F	208 °C
Max. Hot Oil Temperature		446 °F	232 °C

For higher temperature, please consult Deublin.

BC-54100 Series, Monoflow

DN	Hot Oil Part Number	Water or Steam Part Number	A		B	ØC	D	E	ØG	H
15	BC-54100-08-20	BC-54100-08-50	½ NPT	RH	½ NPT	76	154	43	12.7	22.1
	BC-54100-08-21	BC-54100-08-51	½ NPT	LH	½ NPT	76	154	43	12.7	22.1
20	BC-54100-12-20	BC-54100-12-50	¾ NPT	RH	¾ NPT	86	163	43	19	27.6
	BC-54100-12-21	BC-54100-12-51	¾ NPT	LH	¾ NPT	86	163	43	19	27.6
25	BC-54100-16-20	BC-54100-16-50	1 NPT	RH	1 NPT	92	184	52	25	33.7
	BC-54100-16-21	BC-54100-16-51	1 NPT	LH	1 NPT	92	184	52	25	33.7
40	BC-54100-24-20	BC-54100-24-50	1 ½ NPT	RH	1 ¼ NPT	121	237	54	38.1	49.28
	BC-54100-24-21	BC-54100-24-51	1 ½ NPT	LH	1 ¼ NPT	121	237	54	38.1	49.28
50	BC-54100-32-20	BC-54100-32-50	2 NPT	RH	2 NPT	152	270	56	47.8	60.5
	BC-54100-32-21	BC-54100-32-51	2 NPT	LH	2 NPT	152	270	56	47.8	60.4

Threaded Connection

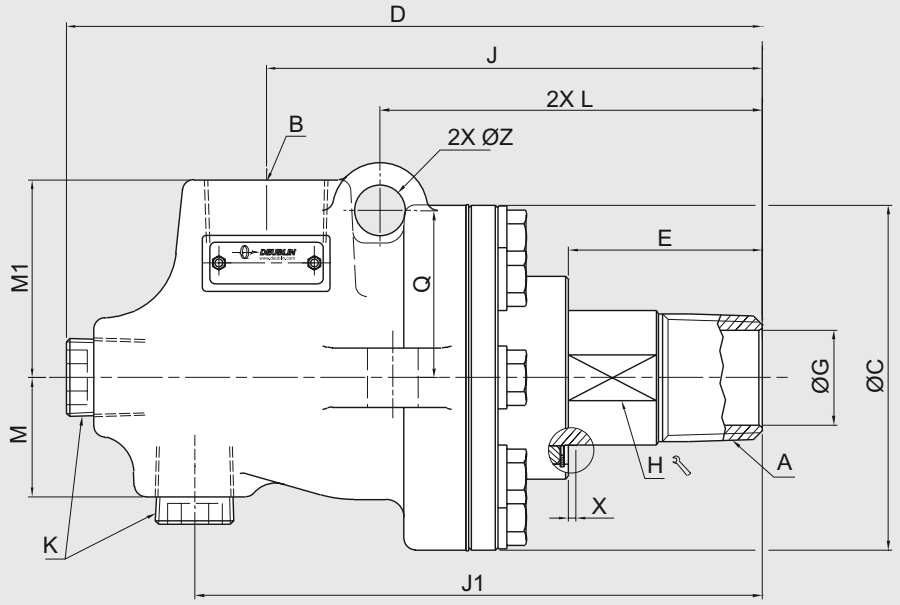

J	J1	K	L	M	M1	Q	X	ØZ	kg	DN
115	136	¼ NPT	–	30	42	–	4.8	–	1.59	15
115	136	¼ NPT	–	30	42	–	4.8	–	1.59	
115	131	½ NPT	–	32	45	–	4.8	–	2.27	20
115	131	½ NPT	–	32	45	–	4.8	–	2.27	
132	151	½ NPT	102	32	53	44	6.3	13.5	2.72	25
132	151	½ NPT	102	32	53	44	6.3	13.5	2.72	
179	190	¾ NPT	120	52	62	57	6.3	16	6.8	40
179	190	¾ NPT	120	52	62	57	6.3	16	6.8	
205	219	1 ¼ NPT	127	65	70	70	7.9	16	11.8	50
205	219	1 ¼ NPT	127	65	70	70	7.9	16	11.8	

DEUBLIN

Rotary Union
BC-54205 Series
Water, Steam & Hot Oil Service, Rotating Siphon

- Duoflow, Rotating Siphon design
- Two widely spaced Carbon Bearings provide greater support to the siphon pipe and hoses
- Carbon Seal placed under compression add strength and shock resistance
- External seal wear indicator allows for planned maintenance reducing expensive downtime
- Cast Iron Housing
- Ferrous Rotor and End Cap

For further information, please contact Deublin or your local representative.

Operating Data

Max. Water or Steam Pressure	2 to 3	225 PSI	15.5 bar
Max. Hot Oil Pressure	¾ to 1½	100 PSI	6.9 bar
Max. Speed	¾ to 1½	400 rpm	400 min^{-1}
	2 to 3	350 rpm	350 min^{-1}
Max. Water Temperature		406 °F	208 °C
Max. Hot Oil Temperature		446 °F	232 °C

For higher temperature, please consult Deublin.

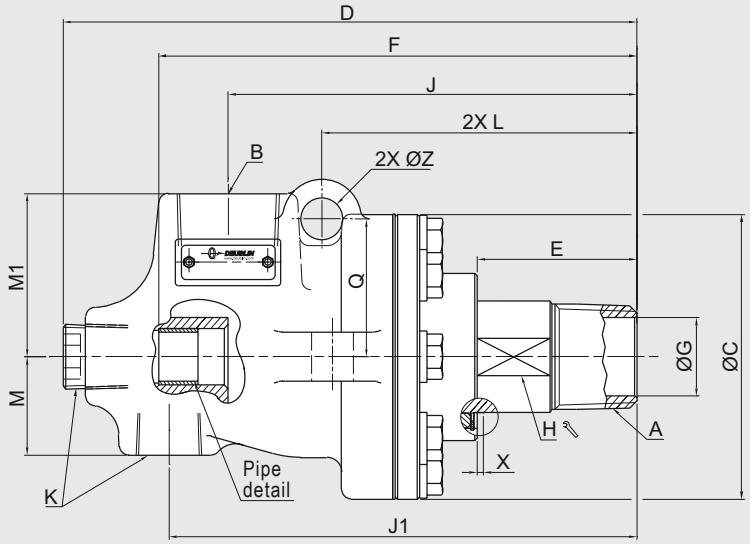

Siphon Dimensions

Joint Size	Siphon Pipe Turned Diameter	Siphon Pipe Turned Length
½	9.42 - 9.45	28.6
¾	12.59 - 12.62	28.6
1	15.77 - 15.80	31.8
1 ¼	20.52 - 20.57	38.1
1 ½	25.27 - 25.32	38.1
2	31.62 - 31.67	50.8
2 ½	37.97 - 38.02	57.2
3	44.32 - 44.37	57.2

DN	Hot Oil Part Number	Water or Steam Part Number	A		B	ØC	D	E	F	ØG	H	J
20	–	BC-54205-12-50	¾ NPT	RH	¾ NPT	86.4	163	43	129	19.3	27.6	115
	BC-54205-12-21	–	¾ NPT	LH	¾ NPT	86.4	163	43	129	19.3	27.6	115
25	BC-54205-16-21	–	1 NPT	LH	1 NPT	92	184	52	154	25	33.7	132
40	BC-54205-24-20	–	1 ½ NPT	RH	1 ½ NPT	121	237	54	190	38.1	49.28	179
	BC-54205-24-21	–	1 ½ NPT	LH	1 ½ NPT	121	237	54	190	38.1	49.28	179
50	–	BC-54205-32-50	2 NPT	RH	2 NPT	152	294	56	212	48	60.45	205
65	–	BC-54205-40-50	2 ½ NPT	RH	2 ½ NPT	172	340	74	254	57	74.5	248
80	–	BC-54205-48-60	CF		3 NPT	200	370	91	293	73	–	284

Threaded End & Siphon Pipe

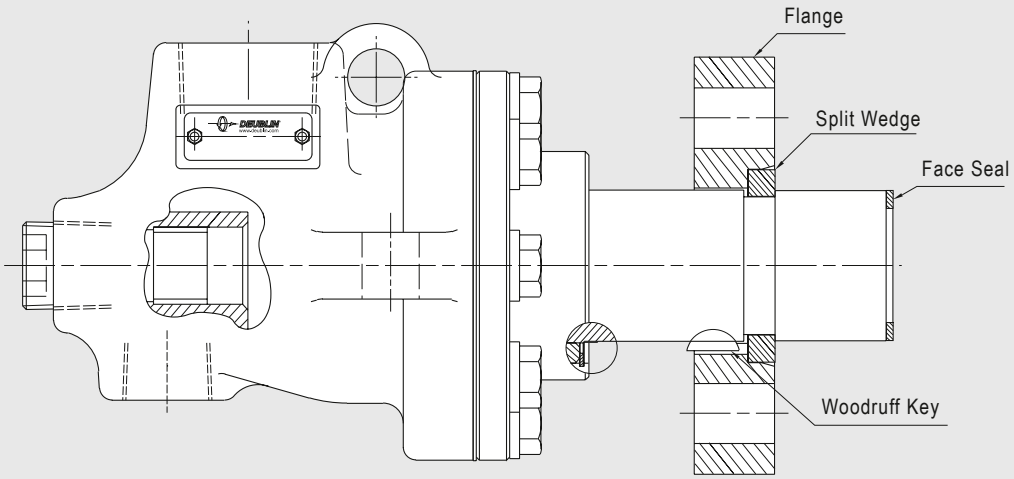

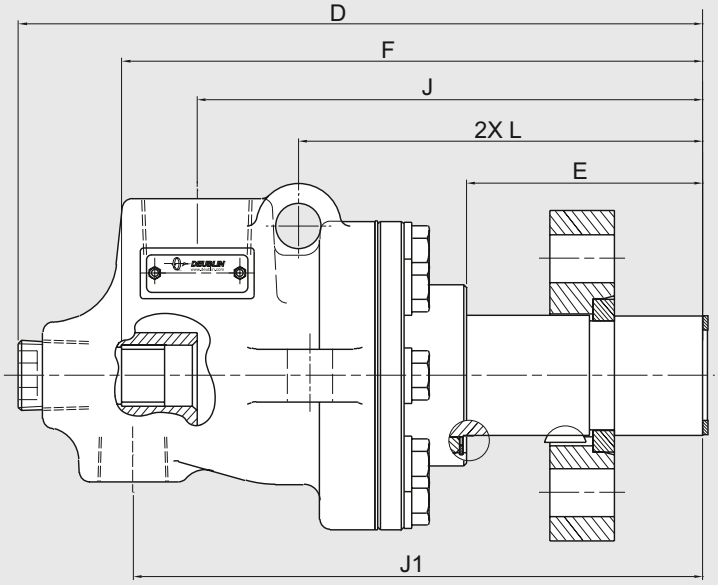

J1	K	L	M	M1	Q	ØR	ØS	ØT	U	4 X ØV	W	X	ØZ	kg	DN
136	½ NPT	–	32	45	–	–	–	–	–	–	–	4.8	–	2.27	**20**
136	½ NPT	–	32	45	–	–	–	–	–	–	–	4.8	–	2.27	
151	½ NPT	102	32	53	44	–	–	–	–	–	–	6.3	13.5	2.72	**25**
190	¾ NPT	120	52	62	57	–	–	–	–	–	–	6.3	16	5.9	**40**
190	¾ NPT	120	52	62	57	–	–	–	–	–	–	6.3	16	5.9	
219	1 ¼ NPT	127	65	70	70	–	–	–	–	–	–	7.9	16	11.79	**50**
258	1 ¼ NPT	161	64	76	78	–	–	–	–	–	–	6.3	19	14.97	**65**
289	1 ½ NPT	181	73	92	92	165	133,35	94.36 ± 0.025	19	17,5	26,2	6.3	24	22.68	**80**

Sealing

Original Rotary Unions used the media pressure to maintain seal contact. Logic indicates that as pressure increases, so do the forces holding the seals together – more pressure = tighter, better sealing.
This is why they were called “pressure joints”.

However, more pressure on the rotary seal face also meant more friction, higher torque and more wear. The resulting service life was not satisfactory.

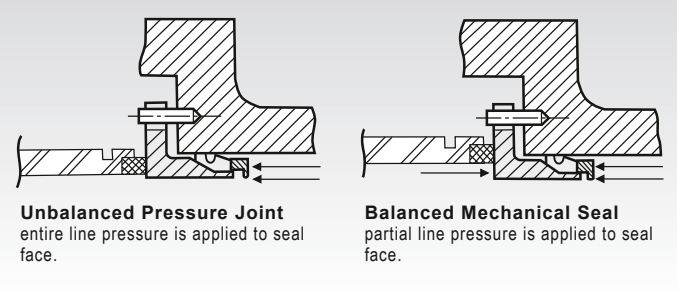

Unbalanced Pressure Joint
entire line pressure is applied to seal face.

Balanced Mechanical Seal
partial line pressure is applied to seal face.

Deublin was aware of the disadvantage and applied “Balanced Mechanical Seal Technology”, a decisive improvement.
This simply means the load or pressure on the seal faces is kept to a minimum regardless of media pressure, resulting in a freer turning union providing longer seal life.
Optimal balance ratio allows for a thin film of “lubricating” media between the seal faces.
In order to attain sealing in a non-pressurised system, the floating seal contact is maintained by the spring pressure.

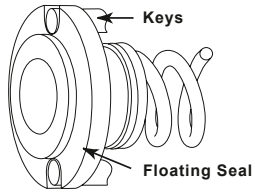

Keyed Floating Seal

Manufacturing

The entire Deublin product range is manufactured with cutting edge technology from the very first drawing to the final production. Modern CNC machining centres transform highest quality materials into precision components. Cost-effective production is achieved by applying new technology and the most modern equipment.

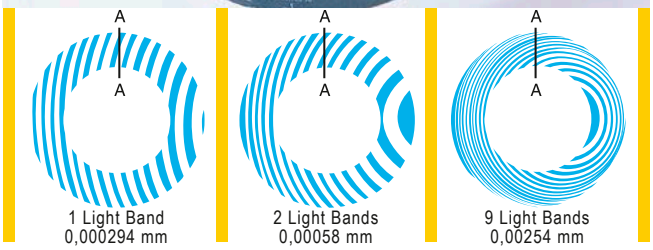

Once assembled, every Rotary Union is dynamically pressure-tested for leakage as part of the final inspection procedure prior to despatch.

The core of a Rotary Union is the seal combination. Seal faces manufactured from tool steel, carbon graphite, bronze, ceramic, tungsten carbide or silicon carbide are micro-lapped to a surface finish of 0.025 RMS and an optical flatness of 2 light bands. To ensure the above specifications the near perfect flatness is checked under mono-chromatic light (refer to picture).

The Deublin Performance System (DPS) focuses production on customer's demand. Through demand-oriented production, available resources are balanced to efficiently produce just-in-time to meet customer requirements.

Micro-Lapped Seals

Thread Specifications used in this Catalog

Symbol	Description
½ NPT	(American) National Pipe Thread
⅝-18 UNF	Unified National Fine Thread
1-14 UNS	Unified National Special
RH / LH	Right Hand / Left Hand
Rp ½	ISO 7/1 (DIN 2999) Pipe Thread (cylindrical internal)

Symbol	Description
G ½	ISO 228 (DIN 259) Straight Pipe Thread
M 22x1,5	ISO Metric Thread
R ⅛	ISO 7/1 (DIN 2999) Pipe Thread (tapered external)
Rc ¾	ISO 7/1 (DIN 2999) Pipe Thread (tapered internal)
BSPT	British Standard Pipe Tapered

Relubrication Guide for Deublin Rotary Unions

All Deublin Rotary Unions are factory lubricated and tested, ready for installation. Unions not equipped with grease fittings are lubricated for the life of the union and require no further maintenance. Rotary unions, which are equipped with grease fittings, may require periodic lubrication to replace the grease which has dissipated. Overgreasing can be as damaging to the union as undergreasing, particularly in high-speed applications. Relubrication frequency and amounts of grease vary greatly depending on union size, operating temperature, rotation speed, moisture, etc. The following charts and table provide approximate lubrication frequency and amounts of grease for light and moderate service conditions.

When relubricating Deublin Rotary Unions, use CHEVRON SRI GREASE NLGI 2. Only low-pressure grease equipment should be used to prevent damage to the bearings and seals. This is a general guide that should be used judiciously. The user must make adjustments as experience dictates. For more specific information, contact your local lubricant supplier.

For alternative greases, please refer to the Operating Manual at www.deublin.com.

Relubrication

Model	Amount of Grease (g)		Model	Amount of Grease (g)
57	3.5		657	18
157	5.5		857	42
257	10		6200	18
357	10		6250	42
525	12		6300	68
555	18		6400	90

For further information please request our separate Lubrication Guide.

Relubrication Interval

Light Service

Temperatures up to 75 °C / 167 °F
little, if any, vibration or moisture (humidity)

Moderate Service

Temperatures 75 °C - 120 °C / 167 °F - 248 °F
some vibration and moisture present

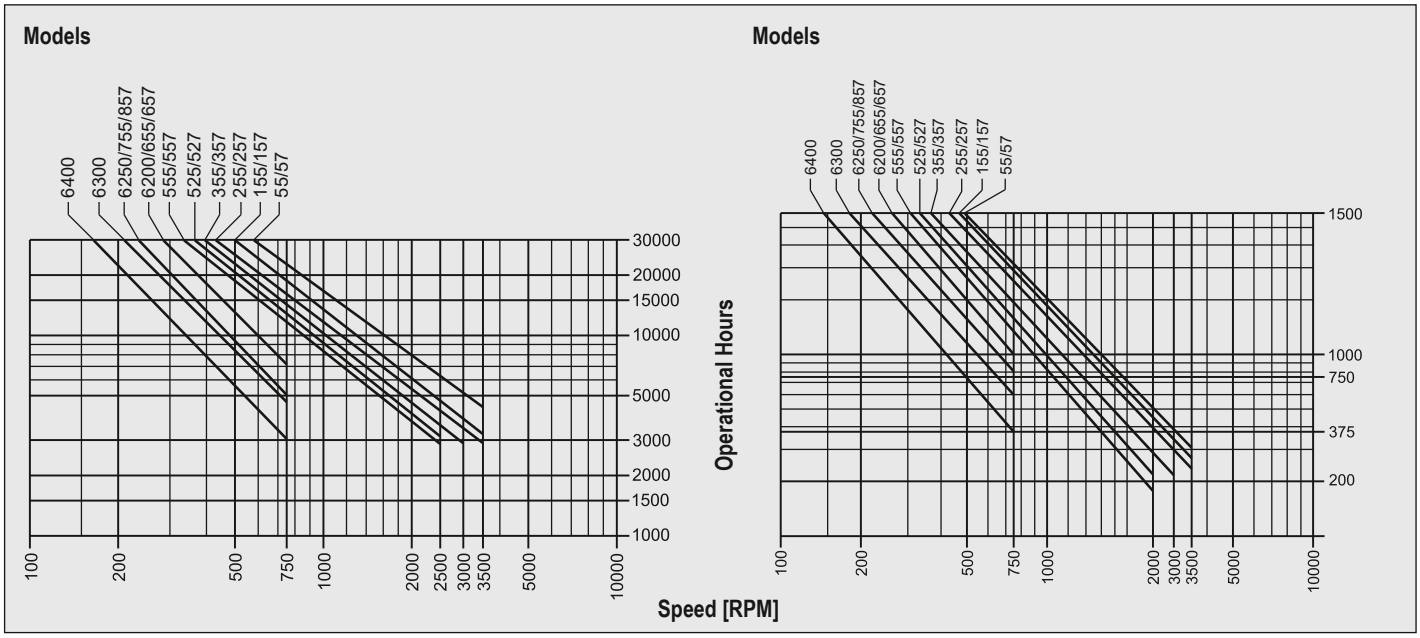

Tightening Torque for Rotors

Rotor Thread	Tightening Torque [Nm]	Operating Pressure [bar]
5/16 - 24 UNF	5	70
3/8 - 24 UNF	7	70
7/16 - 20 UNF	10	70
9/16 - 20 UNF	20	70
5/8 - 18 UNF	35	70
3/4 - 16 UNF	40	50
1 - 14 UNS	90	50
1 1/4 - 12 UNF	170	50
G 1/8 A	10	105
G 1/4 A	15	105
G 3/8 A	25	50
G 1/2 A	50	50
G 3/4 A	100	50
G 1 A	150	50
G 1 1/4 A	200	50
G 1 1/2 A	250	50
G 2 A	300	14
G 2 1/2 A	350	14
G 3 A	400	10

Rotor Thread	Tightening Torque [Nm]	Operating Pressure [bar]
M 8x1	4	140
M 10x1	10	105
M 12x1	15	140
M 12x1.25	15	140
M 12x1.5	15	140
M 12x1.75	15	70
M 14x1.5	25	70
M 15x1	30	140
M 16x2	35	70
M 16x1.5	35	140
M 18x1	40	70
M 20x2.5	50	10
M 20x1.5	50	50
M 22x1.5	80	70
M 27x1.5	115	50
M 35x1.5	250	50
M 50x1.5	350	50
M 65x1.5	350	10

Note: Tightening torques correspond to shaft made from steel and apply for elastomer sealed rotors.
Exception: Rotors with British Standard Pipe Thread (G 1/8 A thru G 3A), normally sealed with gaskets per DIN 7603.

Installation of Deublin Series 55/57 Rotary Unions to customers' interface / spindle end

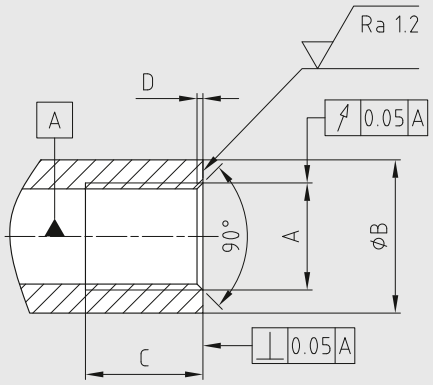

DN	Rotor Mounting Thread A	Min. Sealing contact ØB [mm]	Min. Screw-in depth C [mm]	Max. depth of Counterbore D [mm]
10	G 3/8	25	20	1.1
15	G 1/2	30	23	1.5
20	G 3/4	37	23	1.5
25	G 1	43	26	1.8
32	G 1 1/4	53	32	1.8
40	G 1 1/2	59	33	1.8
50	G 2	75	33	1.8

Tightening Torque for Housings

	Material of Housing or Endcap		
	Brass	**Aluminium Alloy**	**Stainless Steel**
B Port Thread	**Tightening Torque [Nm]**		
G 1/8	5	10	15
G 1/4	10	15	25
G 3/8	25	30	50
G 1/2	50	80	125
G 3/4	100	120	200
G 1	150	300	400
G 1 1/4	200	350	500
G 1 1/2	250	400	600
G 2	300	400	400
G 2 1/2	400	400	400

Note: The tightening torques correspond to fittings sealed with gaskets per DIN 7603.

Tightening of fittings with NPT thread using the FFFT method

- ➢ Wrap the thread of the fitting in clockwise direction, beginning from thread end, with 1½ to 2 turns of Teflon tape. If any sealing compound is used, the first one or two thread pitches, beginning thread end, must remain untreated.
- ➢ Screw in the fitting firmly, finger-tight.
- ➢ Apply, with a waterproof marker a longitudinal marking onto any flat of the hexagon. Continue the marking on housing or endcap surface.
- ➢ Tighten the fitting further with a wrench by using the FFFT method (= **F**lats **F**rom **F**inger **T**ight) for the necessary number of flats (see table on the right).

Attention! Never untighten the pipe fitting to achieve any adjustment!

Between 3½ to 6 thread pitches must be engaged.
Any deviation indicates too lighter tightening or overtightened screw joint or thread beyond allowed tolerance limits.

In case of too light tightened screw joints, retightening up to maximum one turn is permissible.

Thread Size NPT	Number of Flats (FFFT)
⅛ – 27	2.0 – 3.0
¼ – 18	2.0 – 3.0
⅜ – 18	2.0 – 3.0
½ – 14	2.0 – 3.0
¾ – 14	2.0 – 3.0
1 – 11½	1.5 – 2.5
1¼ – 11½	1.5 – 2.5
1½ – 11½	1.5 – 2.5
2 – 11½	1.5 – 2.5

NPT ➡ G (BSP) Stainless Steel Adapters

Deublin Rotary Unions are equipped with G (BSP) and NPT hose connections. Due to worldwide interchangeability our adapters allow the fitting of hoses with the appropriate NPT or G (BSP) threads.

Type A

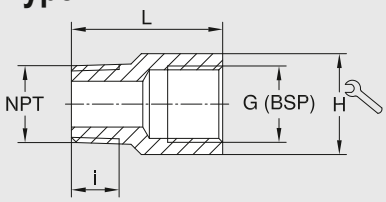

Type B

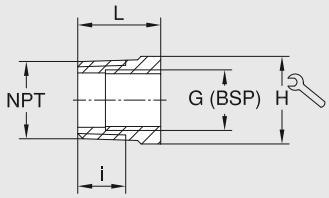

Type C

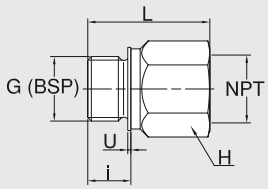

NPT ➡ G (BSP)

Ordering No.	NPT	G (BSP)	L	i	H	Type
6301-012	⅛	¼	28	6.7	17	A
6301-022	¼	¼	31	10.2	17	A
6301-032	⅜	¼	18	10.4	19	B
6301-033	⅜	⅜	33	10.4	22	A
6301-042	½	¼	24	13.6	22	B
6301-043	½	⅜	28	13.6	22	B
6301-044	½	½	37	13.6	27	A
6301-054	¾	½	26	13.9	27	B
6301-055	¾	¾	41	13.9	32	A
6301-064	1	½	31	17.3	36	B

Ordering No.	NPT	G (BSP)	L	i	H	Type
6301-065	1	¾	31	17.3	36	B
6301-066	1	1	48	17.3	41	A
6301-075	1¼	¾	30	18	46	B
6301-077	1¼	1¼	51	18	50	A
6301-085	1½	¾	34	18.4	50	B
6301-088	1½	1½	53	18.4	55	A
6301-097	2	1¼	50	19.2	65	B
6301-099	2	2	70	19.2	65	A
6301-108	2½	1½	80	22.5	75	B
6301-1010	2½	2½	80	22.5	90	A

G (BSP) ➡ NPT

Ordering No.	G (BSP)	NPT	L	i	H	U
6301-133	⅜	⅜	33	12	22	1.5
6301-144	½	½	40	14	27	1.5
6301-155	¾	¾	42	16	32	2

Vent Hole Fittings for the 57 Series

Ordering No.	Fitting	Description
55-617	Vent Hole Plug	Plug
55-591	Vent Cartridge	Push-to-Connect Tube Fitting for 6mm Tube
6075-201	Vent Cartridge	Push-to-Connect Tube Fitting for ¼ inch Tube

Important Information

A Deublin Rotary Union is a precision-made piece of equipment and must be handled accordingly. Sealing between the rotating device – rotor – and the static device – stator – is mainly accomplished via floating seals. Improper use could result in premature leakage or failure.
Although Deublin Rotary Unions are of the highest quality and precision they are, by their very nature, a “wear and tear” product. It‘s important that they should be inspected periodically. Moreover, when seals wear out, the Rotary Union must be replaced or serviced to avoid subsequent leakage. Once a union begins to leak, it is paramount that the union be serviced immediately. Never work with leaking unions!
Deublin Rotary Unions must never be used for applications other than those specified in the catalog. It is strictly prohibited to use Deublin Rotary Unions with hydrocarbons or other flammable media as leakage may result in a fire or explosion. The use of our product on exotic or corrosive media is strictly prohibited without our prior approval. For applications other than those stated in the catalog, Deublin Engineering Department should be contacted for proper instructions. These instructions are provided by Deublin as general guidelines and do not contain exhaustive information about the installation, use or maintenance of unions. Operating instructions and installation manuals are available for Deublin products. Buyers and users of Deublin Rotary Unions should be certain that they have reviewed all of Deublin‘s product information. The operating and installation instructions must be strictly followed when installing Deublin Rotary Unions.

Factory Testing
All Deublin Rotary Unions are factory-tested under pressure prior to shipment. This thorough check ensures that each single Deublin Union is completely operational when you receive it and can – in most cases – be installed with no further consideration.

Warranty
The buyer‘s warranty rights assume that the product shipped be inspected upon receipt and all defects reported to Deublin in writing immediately or for no longer than a period of 2 weeks. Hidden defects must be reported to Deublin in writing immediately upon detection. The warranty is void when the Deublin Rotary Union is tampered with or misused in any way. Otherwise, our General Terms of Sale and Delivery are valid. It cannot be emphasised enough that all dynamic seal components are wear parts.

Deublin will not be held liable for damage resulting from improper use, incorrect warehousing, incorrect transport, faulty assembly, faulty operation, insufficient maintenance, incorrect handling, improper installation by the customer, the use of inappropriate accessories or spare parts and natural abrasion. Please request our General Terms of Sale and Delivery.

Lubrication and Maintenance
Depending on the Deublin product series and the operating parameters all Deublin Rotary Unions are either lubricated for life or have to be relubricated or serviced according to specially defined intervals. Please follow the respective operating instructions or the general “Relubrication Guide” for Deublin Rotary Unions.

Filtering
The service life of the seal is largely determined by filter quality and thus of vital importance for the proper operation of the Rotary Union. We recommend filtration of min. 60 µm. All installation and operating instructions must be carefully reviewed and strictly followed.

Service and Maintenance of Deublin Rotary Unions by Deublin
Use only Deublin spare parts for service of the Deublin Rotary Unions. Prior to service contact Deublin or any authorised Deublin representative. You can find a local Deublin representative at: www.deublin.com .
Most unions can be reconditioned in the field by use of Deublin Service Kits. Generally, we recommend having the Deublin Rotary Unions serviced by Deublin. Service is available at all Deublin factories. Factory rebuilt Rotary Unions carry a “New-Union-Warranty”.

Tension-free Installation
When installing Rotary Unions, special attention has to be paid to a flexible and tension-free hose connection. For additional recommendation please refer to our installation instructions.

Warning

Deublin Rotary Unions should not be used to convey flammable media (flash point ≤ 140 °F or 60 °C) as leakage may result in explosions or fires. Deublin Rotary Unions should be used in accordance with standard safety guidelines for the media, and in a well-ventilated area. The use of our product on hazardous or corrosive media is strictly forbidden.

	Units	Units of Measure in Common Use:							Conversion Factors
	St	USA	D	E	F	I	NL	S	
Speed	1/s	RPM	min^{-1}	r.p.m.	t/min	g/min	min^{-1}	min^{-1}	1 RPM = min^{-1} = $^1/_{60}$ h
Temperature	K (Kelvin)	°F	°C	°C	°C	°C	°C	°C	(°F-32) $^5/_9$ ≙ °C ≙ K+273
Pressure	Pa	PSI	bar	bar	bar	bar	bar	bar	14.5 PSI ≙ 1 bar ≙ 1.02 kg/cm² ≙ 100 kPa
Vacuum	Pa	"Hg	kPa	cmHg	cmHg	kPa	bara	kPa	28" Hg (Vac) ≙ 2" Hg ≙ 5.08 cmHg ≙ 6.75 kPa ≈ 0.07 bara
Weight	kg	# (lbs)	kg	kg	kg	kg	kg	kg	2.2 # ≙ 1.0 kg

Instructions of Hose Installation and Assembly of Deublin Rotary Union

Example Rotary Union 57 Series

1

2

3

4

5

6

7

8

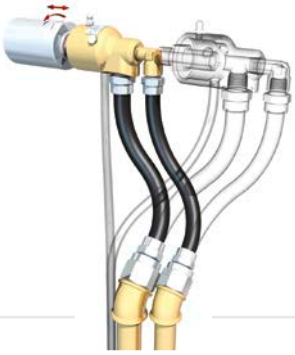

NOTES

NOTES

Since its founding in 1945 as a small, family-owned business, Deublin consistently has adhered to a policy of designing and building the best products of their kind in the world. The result of this policy has been continuous growth through the years, and for this we are grateful to our many loyal customers.

Today, Deublin is the world's largest manufacturer of Rotary Unions, with state-of-the-art factories, technical sales and service, and local stocking in 13 countries on four continents, as well as a worldwide distribution network operating in more than 60 countries. Our global organization and extensive catalog of field-tested products ensure a precise match between each customer's requirements and an engineered solution. Deublin has been part of the HOERBIGER Group since 2019 and forms the core of the Rotary Solutions division.

We cordially invite you to visit our modern manufacturing facilities in Waukegan, Illinois, USA; Mainz, Germany; Monteveglio, Italy; Dalian, China; and Sao Paulo, Brazil.

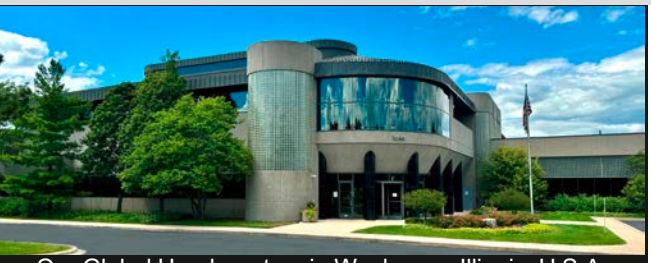
Our Global Headquarters in Waukegan, Illinois, U.S.A.

Mainz, Germany

Monteveglio (Bo), Italy

Dalian, China

Diadema, Brazil

SERVICE AND STOCK ARE AVAILABLE THROUGHOUT THE WORLD

AMERICA

DEUBLIN USA
2050 Norman Drive
Waukegan, IL 60085-6747 U.S.A
Phone: +1 847-689 8600
Fax: +1 847-689 8690
E-Mail: info-us@deublin.com

DEUBLIN Brazil
Av. Fagundes de Oliveira, 538 – A10 / A11 - Piraporinha
CEP: 09950-300 - Diadema - SP - Brasil
Phone: +55 11-2455 3245
Fax: +55 11-2455 2358
E-Mail: info-br@deublin.com

ASIA

DEUBLIN China
No. 2, 6th DD Street,
DD Port Dalian, 116620, China
Phone: +86 411-8754 9678
Fax: +86 411-8754 9679
E-Mail: info-cn@deublin.com

Room 15A07, Wangjiao Plaza
No. 175 East Yan'an Road, Huangpu District
Shanghai 200002
Phone: +86 21-5298 0791
Fax: +86 21-5298 0790
E-Mail: info-cn@deublin.com

DEUBLIN Asia Pacific
7 Temasek Boulevard #21-05
Suntec Tower One, Singapore 038987
Phone: +65 6259-92 25
Fax: +65 6259-97 23
E-Mail: info-sg@deublin.com

DEUBLIN Japan
2-13-1, Minamihanayashiki, Kawanishi City
Hyogo 666-0026, Japan
Phone: +81 72-757 0099
Fax: +81 72-757 0120
E-Mail: info-jp@deublin.com

2-4-10-3F, Ryogoku, Sumida-ku
Tokyo 130-0026, Japan
Phone: +81 35-625 0777
Fax: +81 35-625 0888
E-Mail: info-jp@deublin.com

4-1-13-201 Sakae
Ichinomiya, Aichi 491-0858, Japan
Phone: +81 586-73 0222
Fax: +81 586-73 0223
E-Mail: info-jp@deublin.com

DEUBLIN Korea
Star Tower #1003, Sangdaewon-dong 223-25, Jungwon-gu, Seongnam-si, Gyeonggi-do, South Korea
Phone: +82 31-8018 5777
Fax: +82 31-8018 5780
E-Mail: info-kr@deublin.com

EUROPE

DEUBLIN Germany
Florenz-Allee 1
55129 Mainz, Germany
Phone: +49 6131-49980
E-Mail: info-de@deublin.com

DEUBLIN Italy
Via Guido Rossa 9 - Loc. Monteveglio
40053 Comune di Valsamoggia (BO), Italy
Phone: +39 051-835611
Fax: +39 051-832091
E-Mail: info-it@deublin.com

DEUBLIN Austria
Lainzer Straße 35
1130 Wien, Austria
Phone: +43 1-8768450
Fax: +43 1-876845030
E-Mail: info-at@deublin.com

DEUBLIN France
61 Bis, Avenue de l'Europe
Z.A.C de la Malnoue
77184 Emerainville, France
Phone: +33 1-64616161
Fax: +33 1-64616364
E-Mail: info-fr@deublin.com

DEUBLIN Poland
ul. Bierutowska 57-59
51-317 Wrocław, Poland
Phone: +48 71-3528152
Fax: +48 71-3207306
E-Mail: info-pl@deublin.com

DEUBLIN Spain
C/ Lola Anglada, 20
08228 Les Fonts (Terrassa), Spain
Phone: +34 93-221 1223
E-Mail: info-es@deublin.com

DEUBLIN United Kingdom
6 Sopwith Park, Royce Close, West Portway
Andover SP10 3TS, UK
Phone: +44 1264-33 3355
Fax: +44 1264-33 3304
E-Mail: info-uk@deublin.com

DEUBLIN
HOERBIGER Rotary Solutions

www.deublin.com

 ©2024 Deublin Company